PRELIMINARY **DRAFT** TM 32-5835-250-14&P

TECHNICAL MANUAL

OPERATOR'S, ORGANIZATIONAL, DIRECT SUPPORT, AND GENERAL SUPPORT MAINTENANCE MANUAL (INCLUDING DEPOT REPAIR PARTS AND SPECIAL TOOLS LIST)

65108

RECORDER-REPRODUCER SET, SOUND AN/UYH-15 (NSN XXXX-XX-XXX-XXXX)

DISTRIBUTION RESTRICTION

Distribution authorized to U.S. Government agencies only, to protect technical or operational information from automatic dissemination. Other requests for this document will be referred to: Commander, U.S. Army Electronics Materiel Readiness Activity, ATTN: SELIM-TE, Vint Hill Farms Station, Warrenton, Virginia 22186-5141

DESTRUCTION NOTICE

Destroy by any method that will prevent disclosure of contents or reconstruction of the document.

TBD 1993

HEADQUARTERS, DEPARTMENT OF THE ARMY

PRELIMINARY **DRAFT**

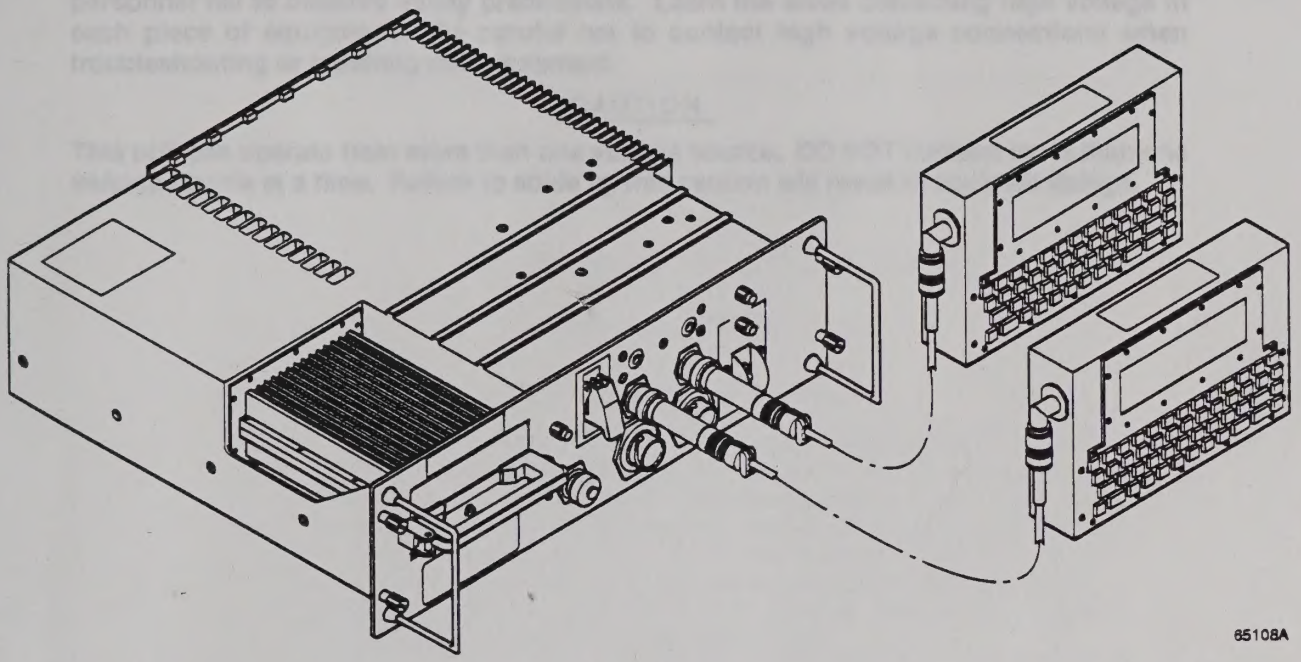

85108A

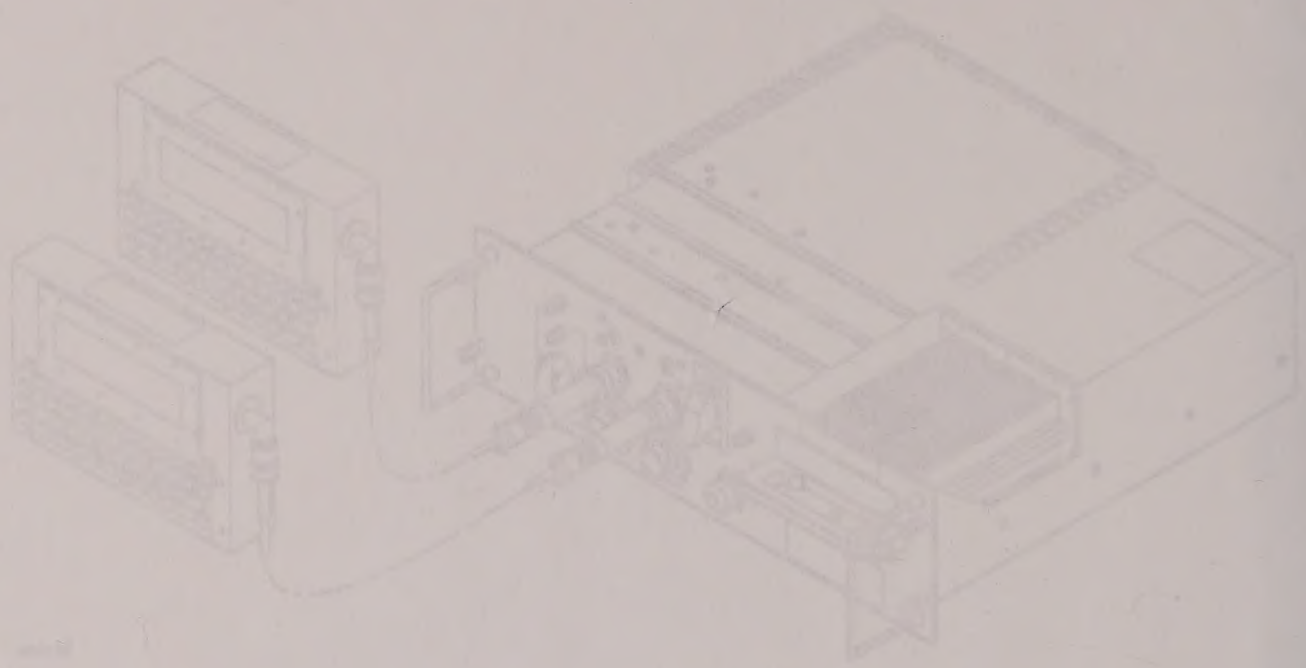

WARNING

HIGH VOLTAGE is present in this equipment. DEATH ON CONTACT may result if personnel fail to observe safety precautions. Learn the areas containing high voltage in each piece of equipment. Be careful not to contact high voltage connections when troubleshooting or repairing this equipment.

CAUTION

This unit can operate from more than one voltage source. DO NOT connect more than one voltage source at a time. Failure to abide by this caution will result in equipent damge.

TECHNICAL MANUAL

NO. 32-5835-250-14&P

HEADQUARTERS
DEPARTMENT OF THE ARMY
Washington, DC, TBD 1993

OPERATOR'S, ORGANIZATIONAL, DIRECT SUPPORT, AND GENERAL SUPPORT MAINTENANCE MANUAL (INCLUDING DEPOT REPAIR PARTS AND SPECIAL TOOLS LIST) FOR RECORDER-REPRODUCER SET, SOUND AN/UYH-15 (NSN XXXX-XX-XXX-XXXX)

Current as of TBD 1993

REPORTING ERRORS AND RECOMMENDING IMPROVEMENTS
You can help improve this manual. If you find any mistakes or if you know of a way to improve the procedures, please let us know. Mail your letter, DA Form 2028 (Recommended Changes to Publications and Blank Forms), or DA Form 2028-2 located in the back of this manual direct to: U.S. Army Electronics Materiel Readiness Activity, ATTN: SELIM-TE, Vint Hill Farms Station, Warrenton, Virginia 22186-5179. A reply will be furnished to you.

TABLE OF CONTENTS

		Page	Illus/ Figure
	HOW TO USE THIS MANUAL	iii	
CHAPTER 1	INTRODUCTION	1-1	
Section I	General Information	1-1	
Section II	Equipment Description	1-2	
Section III	Principles of Operation	1-6	
CHAPTER 2	OPERATING INSTRUCTIONS	2-1	
Section I	Description and Use of Operator's Controls and Indicators	2-3	
Section II	Operator Preventive Maintenance Checks and Services (PMCS)	2-6	
Section III	Operation Under Usual Conditions	2-6	
Section IV	Operation Under Unusual Conditions	2-66	
CHAPTER 3	OPERATOR MAINTENANCE	3-1	
CHAPTER 4	ORGANIZATIONAL MAINTENANCE	4-1	
Section I	Lubrication Instructions	4-1	
Section II	Service Upon Reciept	4-1	
Section III	Organizational Preventive Maintenance Checks and Services (PMCS)	4-2	

TABLE OF CONTENTS - CONTINUED

		Page	Illus/ Figure
Section IV	Organizational Troubleshooting Procedures	4-2	
Section V	Organizational Maintenance	4-3	
CHAPTER 5	DIRECT SUPPORT MAINTENANCE	5-1	
Section I	Lubrication Instructions	5-1	
Section II	Direct Support Preventive Maintenance Checks and Services (PMCS)	5-1	
Section III	Direct Support Troubleshooting Procedures	5-2	
Section IV	Direct Support Maintenance	5-7	
CHAPTER 6	GENERAL SUPPORT MAINTENANCE	6-1	
APPENDIX A	REFERENCES	A-1	
APPENDIX B	MAINTENANCE ALLOCATION CHART (MAC)	B-1	
APPENDIX C	REPAIR PARTS AND SPECIAL TOOLS LIST (RPSTL)	C-1	
Section I	Introduction	C-1	
Section II	Repair Parts List	C-	
Group A	Recorder-Reproducer Set, Sound AN/UYH-15	C-	C-
Group AR	Recorder-Reproducer, Sound RD-634/UYH-15	C-	C-
Group ARA1	CCA, Motherboard	C-	C-
Group ARA2	CCA, Audio	C-	C-
Group ARA4	CCA, CP	C-	C-
Group ARA7	Chassis-Electrical Equipment	C-	C-
Group ARB1	Wire Harness, Audio	C-	C-
Group ARB2	Wire Harness, CP	C-	C-
Section III	Special Tools List	C-	
Section IV	Cross-reference Indexes	C-	
	National Stock Number Index	C-	
	Part Number Index	C-	
	Figure and Item Number Index	C-	
	Reference Designator (REF DES) Index	C-	
APPENDIX D	COMPONENTS OF END ITEM (COI) AND BASIC ISSUE ITEMS (BII) LISTS	D-1	
APPENDIX E	EXPENDABLE AND DURABLE ITEMS LIST	E-1	
APPENDIX F		F-1	
GLOSSARY		G-1	
INDEX		I-1	
FOLDOUTS			

HOW TO USE THIS MANUAL

This manual is divided into 6 chapters:

Chapter 1 contains an introduction to this manual and a functional description of the AN/UYH-15.

Chapter 2 contains operating instructions for the AN/UYH-15.

Chapter 3 contains operator maintenance instructions for the AN/UYH-15.

Chapter 4 contains organizational maintenance instructions for the AN/UYH-15.

Chapter 5 contains direct support maintenance instructions for the AN/UYH-15.

Chapter 6 contains general support maintenance instructions for the AN/UYH-15.

Pages in this manual are numbered consecutively by chapter. Each chapter is divided into sections. The first page of each chapter contains a table listing the contents and gives the index number of the page number of the data in that chapter.

65114

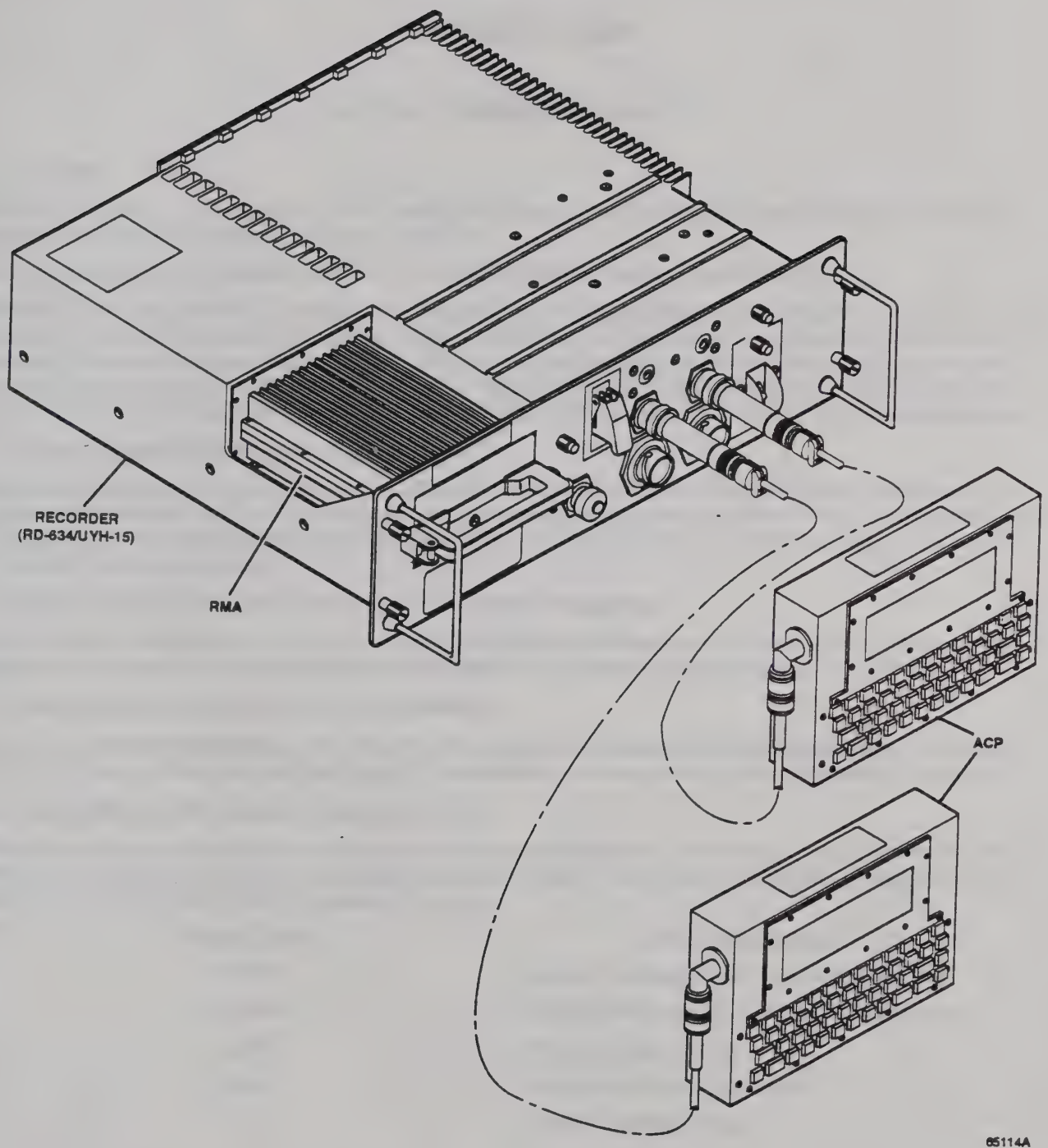
RECORDER
(RD-634/UYH-15)
RMA
ACP
65114A

CHAPTER 1

INTRODUCTION

SECTION I. GENERAL INFORMATION

1-1 SCOPE.

TYPE OF MANUAL: Operator's, Organizational, Direct Support, and General Support Maintenance Manual (Including Depot Repair Parts and Special Tools List)

MODEL NUMBER AND EQUIPMENT NAME: Recorder-Reproducer Set, Sound AN/UYH-15

PURPOSE OF EQUIPMENT: The AN/UYH-15 records and reproduces audio signals digitally on a hard disk assembly for support of tactical and communications intercept. The set supports two operator positions long with the capability to connect to a host controller. The set can simultaneously record four input audio signals, two operator commentary channels, and play back two audio signals. Voice transcription capabilities support operator commentary for the input signals being recorded for during non-real time signal analysis of prerecorded signals.

1-2 MAINTENANCE FORMS AND RECORDS.

Department of the Army forms and procedures used for equipment maintenance will be those prescribed by (as applicable) DA PAM 738-750, The Army Maintenance Management System; DA PAM 738-751, Functional Users Manual for the Army Maintenance Management System - Aviation (TAMMS-A); or AR 700-138, Army Logistics Readiness and Sustainability.

1-3 DESTRUCTION OF ARMY MATERIEL TO PREVENT ENEMY USE.

Destruction of Army electronics materiel to prevent enemy use shall be in accordance with TM 750-244-2. For destruction of data on the removable memory assembly (RMA), refer to paragraph 2-9.1, Disk Erase.

1-4 PREPARATION FOR STORAGE OR SHIPMENT.

Due to possible classified data on the disk, the disk must either be erased before shipment (refer to paragraph 2-9.1, Disk Erase), or the disk must be shipped in accordance with instructions on shipping classified material

1-5 NOMENCLATURE CROSS-REFERENCE LIST.

The common name is used in this manual to make procedures easier for you to read. A cross-reference between the common name and the official nomenclature is shown below. Abbreviations/acronyms, and a glossary are also included at the back of this manual to aid you.

Common Name	Official Nomenclature
RRSS	Record-Reproducer Set, Sound AN/UYH-15
Recorder	Recorder-Reproducer, Sound RD-634/UYH-15
ACP	Alternate Control Panel
RMA	Removable Memory Assembly
MIG	Memory Interface Group

1-6 REPORTING EQUIPMENT IMPROVEMENT RECOMMENDATIONS (EIR).

If your RRSS needs improvement, let us know. Send us an EIR. You, the user, are the only one who can tell us what you don't like about your equipment. Let us know why you don't like the design or performance. Put it on an SF 368 (Product Quality Deficiency Report). Mail it to the address specified in DA PAM 738-750.

1-7 WARRANTY INFORMATION.

The RRSS is warranted for a period of 1 year. The warranty starts on the date of acceptance of the RRSS by the procuring activity. Report all defects to your supervisor, who will take appropriate action.

1-8 SAFETY, CARE, AND HANDLING.

The RRSS contains components that are (electrostatic discharge) ESD sensitive. These components are the Audio circuit card assembly (CCA) and the Central Processing (CP) CCA and are considered class 1 ESD sensitive components in accordance with DOD-HDBK-263. Handle these components only by the CCA extractor handles and while using proper ESD preventive measures. If ESD preventive measures are not available, minimize the risk of damage to the CCAs by ensuring that they are only handled by the CCA extractor handles and that minimum handling occurs.

1-9 CORROSION PREVENTION AND CONTROL (CPC).

Corrosion Prevention and Control (CPC) of Army materiel is a continuing concern. It is important that any corrosion problems with this unit be reported so that the problem can be corrected and improvements can be made to prevent the problem in future units.

While corrosion is typically associated with rusting of metals, it can also include deterioration of other materials, such as rubber and plastic. Unusual cracking, softening, swelling, or breaking of these materials may be a corrosion problem.

If a corrosion problem is identified, it can be reported using Standard Form 368, Product Quality Deficiency Report. Use of keywords such as "corrosion," "rust," "deterioration," or "cracking" will ensure that the information is identified as a CPC problem.

The form should be submitted to the address specified in DA PAM 738-750

1-10 SECURITY MEASURES FOR ELECTRONIC DATA.

NOTE

Disk erasure according to paragraph 2-9.1 will declassify the RMA in accordance with AR 380-380. The specific requirements of your mission may not allow declassification of an erased disk. Refer to your mission requirements and regulations for direction on handling of declassified disks.

The RMA may be classified due to the data or the type of data that is recorded. The specific security measures required when using the RRSS or handling the RMA will depend upon the mission requirements and the type of data recorded. Instructions for loading the RMA in the RRSS are in paragraph 2-4, instructions for removal of the RMA from the RRSS are in paragraph 2-8. Instructions for erasing the disk of all data are in paragraph 2-9.1.

SECTION II. EQUIPMENT DESCRIPTION

1-11 EQUIPMENT CHARACTERISTICS, CAPABILITIES, AND FEATURES.

CHARACTERISTICS

- Rack mounted
- Four independent primary audio input channels.
- Two independent commentary input channels

- Two independent audio output channels
- Internal power supply
- Removable digital recording media

CAPABILITIES AND FEATURES

- Operates in ground based environments
- Capable of operating from one of three power sources
- Operates stand-alone or integrated with a host system
- Built-In Test (BIT) upon power-up or user command
- Two keypads for command and data entry
- Manual or automatic recording of audio signals
- Simultaneous recording and playback
- Maintains operator commentary with recorded audio file
- Independent volume control of playback signal levels and commentary signals levels
- Recorded audio and associated commentary are simultaneously played back on a single output channel
- Playback speeds of 0.5, 0.6, 0.7, 0.8, 0.9, 1.0, 1.5, 2.0, 2.5, and 3.0 times the recorded speed

1-12 LOCATION AND DESCRIPTION OF MAJOR COMPONENTS.

The following are the major components of the RRSS:

- Recorder - Contains power, audio, and control circuitry to record and manipulate audio signals in accordance with operator commands.
- ACPs - Provides operator control and data entry.
- RMA - Provides magnetic storage of audio signals.

65109

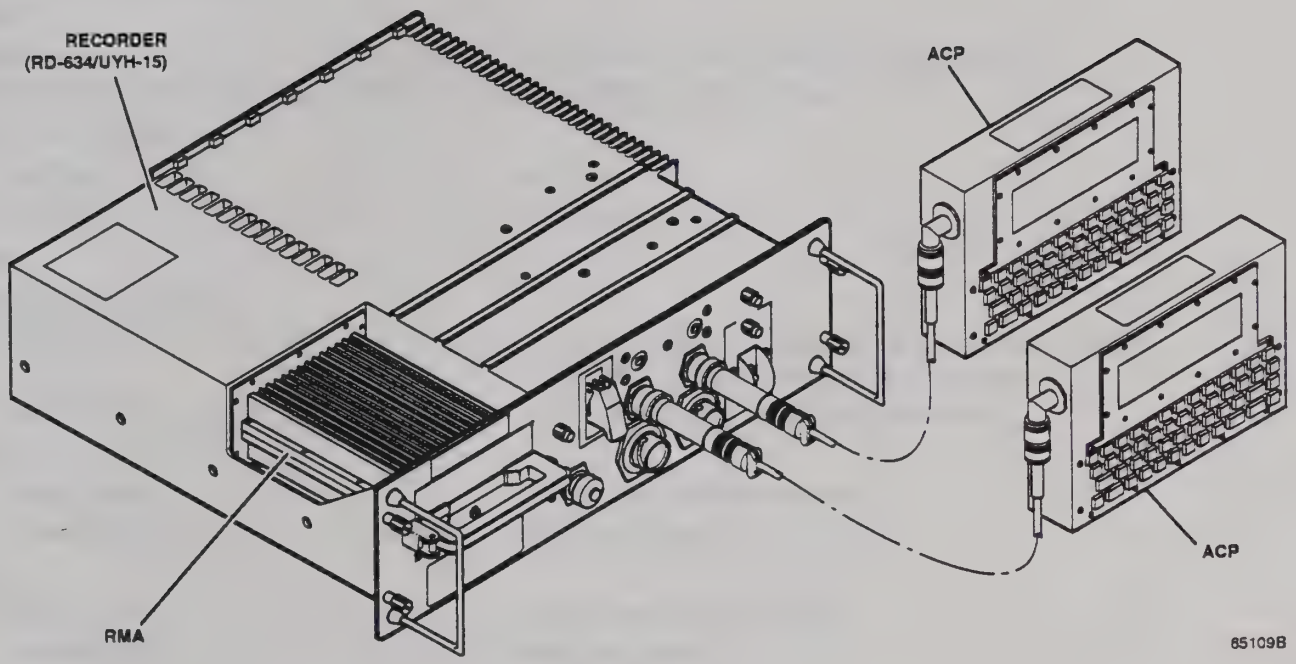
RECORDER
(RD-634/UYH-15)
ACP
ACP
RMA
85109B

1-13 EQUIPMENT DATA.

The following is a summary of the physical and electrical characteristics for the RRSS.

ELECTRICAL CHARACTERISTICS

Input Power:

- Voltage ..... 22 to 30 VDC, 105 to 130 VAC, 208 to 240 VAC
- Frequency (115 and 220 VAC operation) ..... 47 to 400 Hz, Single Phase
- Power Consumption:
  - Nominal ..... 85 watts
  - Maximum ..... 175 watts

Analog Inputs:

- Input Channels (1 thru 4):
  - Signal Level ..... 0 to 10 dBm (1 to 10 milliwatts) @ 600 ohms, -12.2 to -2.2 dBm (1 to 10 milliwatts) @ > 10K ohms
  - Impedance ..... > 10k normal (600 (±60) ohms selectable)
- Commentary:
  - Signal Level ..... 0 to 10 dBm (1 to 10 milliwatts)
  - Impedance ..... 600 (±60) ohms
- Tape In:
  - Signal Level ..... 0 to 10 dBm (1 to 10 milliwatts)
  - Impedance ..... 600 (±60) ohms
- Headset:
  - Signal Level ..... -43.93 dBm (450 microvolts) maximum
  - Impedance ..... 5 ohms nominal

Clock ..... Not used

Analog Outputs:

- Output Channels (1 and 2):
  - Signal Level ..... ≥ 13.01 dBm (20 milliwatts) @ maximum volume setting
  - Impedance ..... 600 (±60) ohms
- Tape Out:
  - Signal Level ..... ≥ 13.01 dBm (20 milliwatts) @ maximum volume setting
  - Impedance ..... 600 (±60) ohms
- Headset Headphone:
  - Signal Level ..... ≥16.99 dBm (50 milliwatts)
  - Impedance ..... 19 ohms nominal

Host Interface:

Serial interface (RS-232-C):

Mode ..... Asynchronous, full duplex

Baud rate 9600

Parallel interface (IEEE-488):

Address range ..... 5 line (00 to 1F hexadecimal), TTL compatible

Foot Switch Interface ..... TTL compatible

Automatic Recording:

Threshold ..... 0 to +12 dB (±3 dB) above thermal noise level

Delay time ..... adjustable from 0 to 0.5 second (± 0.1 second)

Bridge time ..... selectable from 0.1 to 5 seconds

ENVIRONMENTAL CHARACTERISTICS

Temperature:

Operating ..... -25 to +131° F (-31.67 to +55° C)

Non-Operating ..... -55 to +160° F (-48.33 to +71.11° C)

Altitude:

Operating ..... up to 10,000 ft (3048 m)

Non-Operating ..... up to 50,000 ft (15240 m)

Vibration (Non-Operating):

5 to 200 Hz ..... IAW MIL-STD-810D, figures 514.3-7 thru 514.3-9

200 to 500 Hz ..... 0.01 g^2 per Hz flat spectrum

Humidity ..... 20 to 75 % relative humidity at +86 to +140° F (+30 to +60° C)

Salt Fog ..... 5 % salt-sea atmosphere maximum at +95° F (+35° C)

MECHANICAL CHARACTERISTICS

RRSS weight ..... 42.07 lbs (19.08 kg)

Recorder:

Weight ..... 31.19 lbs (14.15 kg)

Height ..... 5.22 in. (13.26 cm)

Width ..... 19.00 in. (48.26 cm)

ACP:

Weight ..... 3.41 lbs (1.55 kg)

Height ..... 2.39 in. (6.07 cm)

Width ..... 10.13 in. (25.73 cm)

Depth ..... 6.00 in. (15.24 cm)

RMA:

Weight ..... 4.06 lbs (1.84 kg)

Height ..... 2.34 in. (5.94 cm)

Width ..... 5.70 in. (14.48 cm)

Depth ..... 8.75 in. (22.23 cm)

Capacity ..... 172 megabytes (formatted)

SECTION III. PRINCIPLES OF OPERATION

1-14 PRINCIPLES OF OPERATION.

The RRSS has three functional groups; the ACPs, the recorder, and the RMA.

ACPs

Each ACP contains a display and keyboard. The display provides unit status, alerts, file information, and command prompts. The keyboard contains alphanumeric keys for command and data entry. Predefined keys provide quick access to key operator commands.

RECORDER

The recorder receives audio signals, digitizes the signals, and routes the digital data to the RMA. Digital signals retrieved from the RMA, are manipulated (as directed by the operator from the ACPs or a host controller), converted to an audio signal and routed to the output selected by the operator.

RMA

The RMA receives digital data from the recorder and stores it for future retrieval. Retrieved data is routed to the recorder.

65110

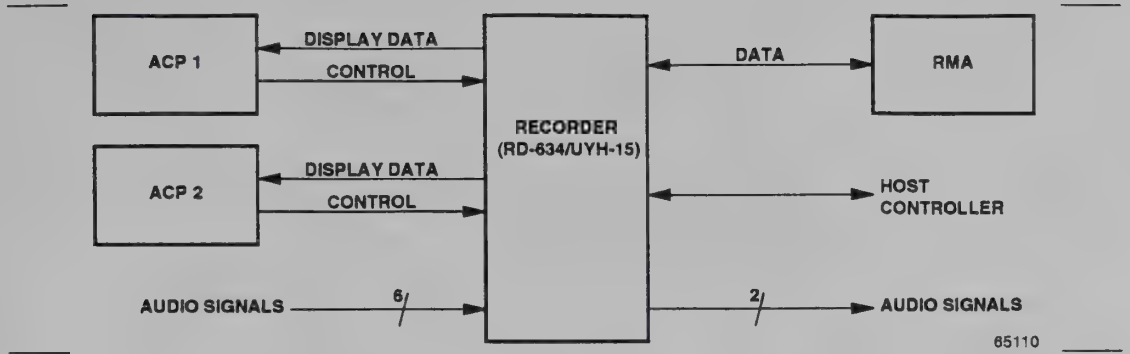
ACP 1
DISPLAY DATA
CONTROL
ACP 2
DISPLAY DATA
CONTROL
AUDIO SIGNALS
6
RECORDER
(RD-634/UYH-15)
DATA
RMA
HOST
CONTROLLER
2
AUDIO SIGNALS
65110

CHAPTER 2

OPERATION INSTRUCTIONS

Section I. Description and Use of Operator's Controls and Indicators 2-3

2-1 Recorder Controls and Indicators 2-3
2-2 ACP Controls and Indicators 2-4

Section II. Operator Preventive Maintenance Checks and Services (PMCS) 2-6

Section III. Operation Under Usual Conditions 2-6

2-3 Overview 2-6
2-3.1 RRSS 2-6
2-3.2 Technical Manual Conventions 2-6
2-4 Assembly and Preparation For Use 2-6
2-5 Initial Checks and Self Test 2-7
2-6 Operating Instructions 2-7
2-6.1 ACP Display Conventions 2-8
2-6.1.1 Next or Previous Character 2-9
2-6.1.2 Next or Previous Line 2-9
2-6.1.3 Next or Previous Field 2-10
2-6.1.4 Scroll Preset Values 2-11
2-6.1.5 Enter Data (Characters) 2-12
2-6.1.6 Delete Data (Characters) 2-12
2-6.2 Power-Up 2-13
2-6.3 Restart 2-17
2-6.4 Record 2-19
2-6.4.1 Set Up Receive Channels 2-19
2-6.4.2 Start Manual Recording 2-23
2-6.4.4 Stop Manual Recording 2-24
2-6.5 Play Back 2-27
2-6.5.1 Start Playback of In-Progress Recording 2-27
2-6.5.2 Start Playback of Previously Recorded File 2-29
2-6.5.3 Adjust Playback Volume 2-30
2-6.5.4 Adjust Playback Speed and Pitch 2-31
2-6.5.5 Reinsert Gaps 2-31
2-6.5.6 Pause/Resume Playback 2-32
2-6.5.7 Stop Playback 2-32
2-6.6 Commentary 2-34
2-6.6.1 Set Commentary Channels 2-34
2-6.6.2 Start Commentary 2-37
2-6.6.3 Stop commentary 2-38
2-6.7 Tabs 2-39
2-6.7.1 Insert Tab 2-39
2-6.7.2 Delete Tab 2-39
2-6.7.3 Tab Operations 2-40
2-6.8 File Index Utilities 2-43
2-6.8.1 Display File Label 2-43

2-6.8.2 File Search 2-43
2-6.8.3 Complete/Edit File Label 2-49
2-6.8.4 Delete a File 2-52
2-6.9 Disk/Tape File Transfer 2-54
2-6.9.1 Start File Transfer to Tape 2-54
2-6.9.2 Stop File Transfer to Tape 2-57
2-6.9.3 Start Transfer from Tape 2-57
2-6.9.4 Stop Transfer from Tape 2-58
2-6.9.5 Transfer Entire Disk to Tape 2-58
2-6.10 Disk Utilities 2-59
2-6.10.1 Check Disk Space 2-59
2-6.10.2 Dump Files to External Tape 2-59
2-6.10.3 Delete Unlocked Files 2-60
2-6.10.4 Format Disk 2-61
2-6.11 DISK FULL Indicator 2-62
2-6.12 Shut Down 2-64
2-7 Decals And Instruction Plates 2-65
2-8 Preparation For Movement 2-65

Section IV. Operation Under Unusual Conditions 2-66

2-9 Emergency Procedures 2-66
2-9.1 Disk Erase 2-66
2-9.2 95% Fail 2-66

SECTION I. DESCRIPTION AND USE OF OPERATOR'S CONTROLS AND INDICATORS

2-1 RECORDER CONTROLS AND INDICATORS.

Controls and indicators for the Recorder are described below.

65115

Key	Control/Indicator	Function
1	Locking handle	Secures RMA to recorder
2	Handle release button	Secures locking handle in place
3	DISK FULL indicator	Blinks when disk utilization reaches 80%, remains lit when disk utilization reaches 90%
4	DISK ERASE switch (protected momentary switch)	When activated, starts a full disk erase. Operation of this switch will destroy ALL data currently stored on the RMA
5	FAULT indicator	Blinks when Built-in-Test (BIT) is in progress. Remains lit when a fault is detected by BIT
6	POWER indicator	Lights when power supply is supplying +5 Vdc
7	ON/OFF circuit breaker (toggle)	Connects operational power to power supply

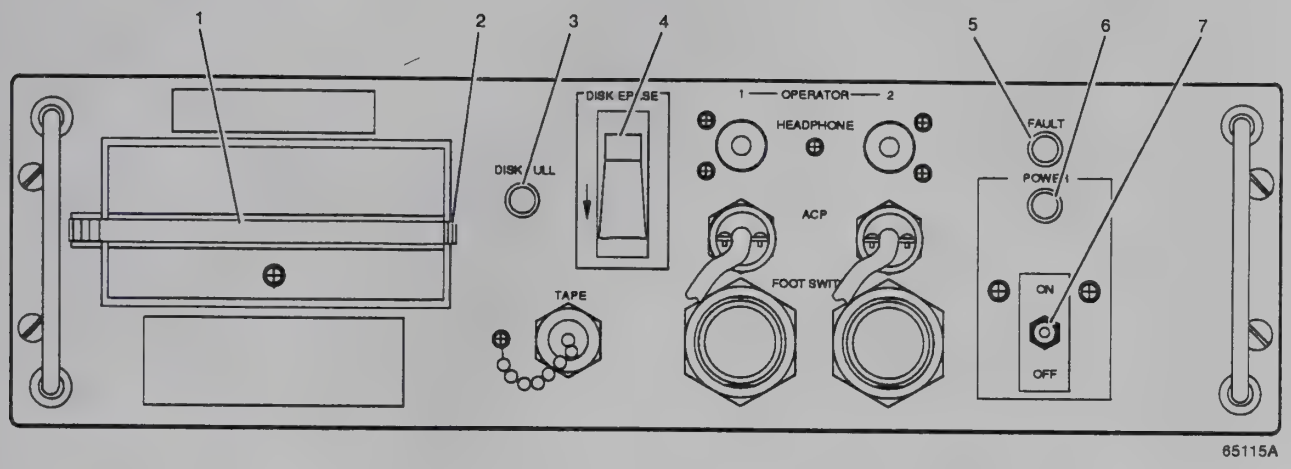
1
2
3
4
5
6
7
DISK EJECT
DISK PULL
1 — OPERATOR — 2
HEADPHONE
FAULT
POWER
ACP
FOOT SWITCH
TAPE
ON
OFF
65115A

2-2 ACP CONTROLS AND INDICATORS.

Controls and indicators for the ACPs are described below.

65116

Key	Control/Indicator	Function
1	Display	Shows current RRSS state, alerts, operating options, file labels and other information
2	**RC1** (: and **1** KEY)	Starts and stops channel 1 recording during manual record operations; used with **CODE** key
3	**RC2** (; and **2** key)	Starts and stops channel 2 recording during manual record operations; used with **CODE** key
4	**RC3** (- and **3** key)	Starts and stops channel 3 recording during manual record operations; used with **CODE** key
5	**RC4** (" and **4** key)	Starts and stops channel 4 recording during manual record operations; used with **CODE** key
6	**CMT** (' and **5** key)	Starts and stops commentary; used with **CODE** key
7	**P →T** (, and **6** KEY)	Starts and stops transfer of recordings from RRSS disk to tape; used with **CODE** key

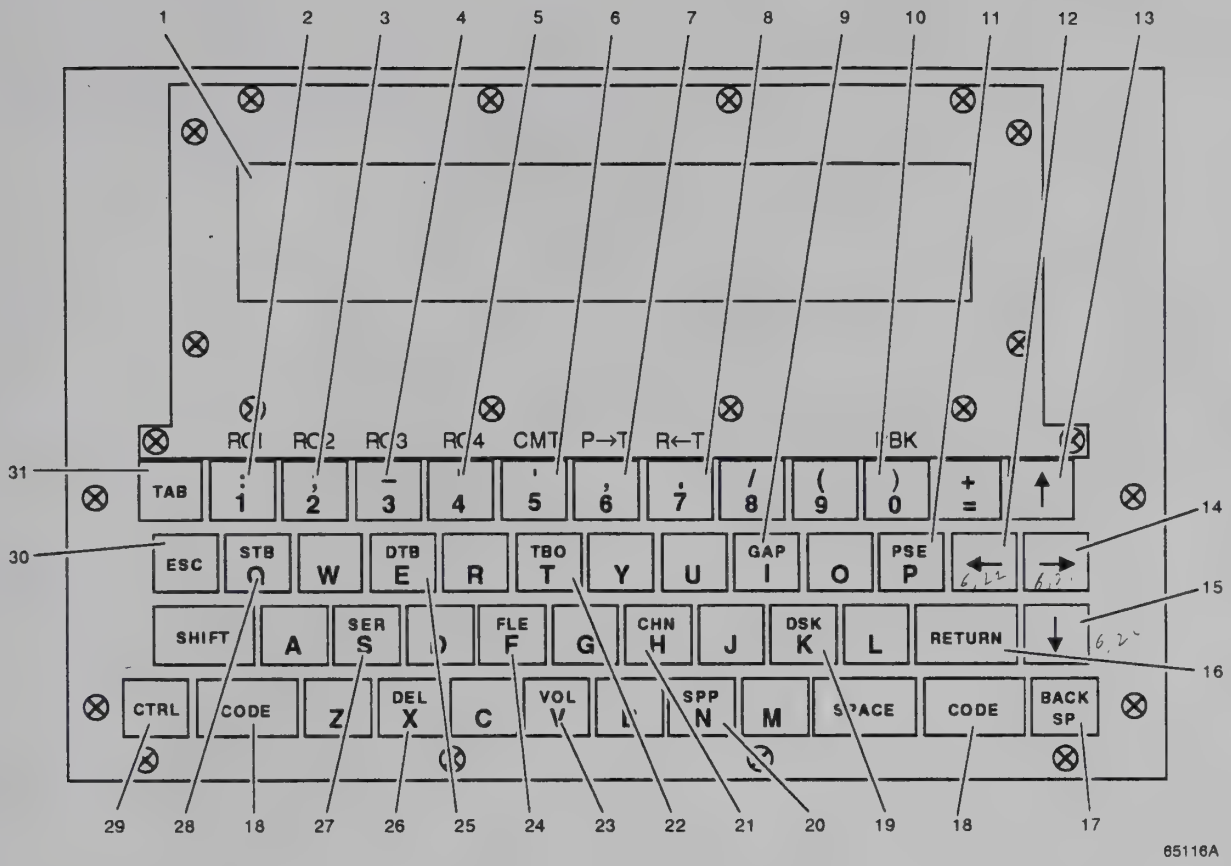
1
2
3
4
5
6
7
8
9
10
11
12
13
RC1
RC2
RC3
RC4
CMT
P→T
R←T
BK
31
30
14
15
16
TAB
ESC
STB
DTB
TBO
GAP
PSE
SHIFT
SER
FLE
CHN
DSK
RETURN
CTRL
CODE
DEL
VOL
SPP
SPACE
CODE
BACK SP
29
28
18
27
26
25
24
23
22
21
20
19
18
17
65116A

ACP CONTROLS AND INDICATORS - Continued

Key	Control/Indicator	Function
8	**R←T** (. and **7** KEY)	Starts and stops transfer of recordings from tape to RRSS disk; used with **CODE** key
9	**GAP** (I KEY)	Inserts in playback gaps suppressed during recording; used with **CODE** key
10	**PBK** () and **0** KEY)	Starts and stops playback of recordings; used with **CODE** key
11	**PSE** (**P** KEY)	Pauses and resumes playback; used with **CODE** key
12	←	Moves cursor left to previous character during certain operations
13	↑	Scrolls upwards through file labels or preset values, depending upon RRSS operation. Used to select among type of recordings and preset values, also used to select and display file labels
14	→	Moves cursor right to next character during certain operations
15	↓	Scrolls downwards through file labels or preset values, depending upon RRSS operation. Used to select among type of recordings and preset values, also used to select and display file labels
16	**RETURN**	Invokes many RRSS operations after preliminary setup. Used to start RRSS after date and time entry, file transfers, tab operations, start file search, file deletions, etc.
17	**BACK SP**	Deletes character cursor is on during certain operations
18	**CODE**	Simultaneously pressed with **RC1**, **RC2**, **RC3**, **RC4**, **CMT**, **P→T**, **R←T**, **PSE**, **GAP**, **SPP**, **CHN**, **TBO**, **VOL**, **FLE**, **SER**, **CTRL**, **STB**, **ESC**, **DTB** and **PBK** keys to control certain RRSS operations
19	**DSK** (**K** KEY)	Invokes disk utilities. Used to check disk space, dump contents of disk to tape, delete all unlocked files, and format disk
20	**SPP** (**N** KEY)	Sets up playback speed and pitch; used with **CODE** key
21	**CHN** (**H** KEY)	Sets up commentary channels; used with **CODE** key
22	**TBO** (**T** KEY)	Permits tab operations; used with **CODE** key
23	**VOL** (**V** KEY)	Adjusts playback volume; used with **CODE** key
24	**FLE** (**F** KEY)	Displays file labels; used with **CODE** key
25	**DTB** (**E** KEY)	Deletes a tab; used with **CODE** key
26	**DEL** (**X** KEY)	Deletes a file; used with **CODE** key
27	**SER** (**S** KEY)	Searches for files having operator specified attributes; used with **CODE** key
28	**STB** (**Q** KEY)	Inserts a tab; used with **CODE** key
29	**CTRL**	Restarts RRSS when simultaneously pressed with **CODE** and **ESC** keys
30	**ESC**	Restarts RRSS when simultaneously pressed with **CODE** and **CTRL** keys
31	**TAB**	Moves cursor right to select options within many RRSS operations. Simultaneously pressing **TAB** and **CTRL** keys moves cursor left

SECTION II. OPERATOR PREVENTIVE MAINTENANCE CHECKS AND SERVICES (PMCS)

There are no operator preventive maintenance checks and services for the RRSS.

SECTION III. OPERATION UNDER USUAL CONDITIONS

2-3 OVERVIEW.

2-3.1 RRSS.

The RRSS can be operated from its ACPs or by a host system; the operating procedures in this manual are presented using an ACP. The ACPs permit keyboard entry of commands and provide information about the RRSS and its operation. Operation from a host system is identical, except where indicated. Actual commands entered on a host system are system dependent, refer to applicable system technical manuals for host system commands. The RRSS can accommodate foot switches to start and stop recording and headphones to listen to audio.

2-3.2 Technical Manual Conventions.

Specific key strokes, display messages and placarding are shown in **bold** lettering.

2-4 ASSEMBLY AND PREPARATION FOR USE.

The only preparation of the RRSS required for use, is to ensure that an RMA is installed in the recorder. If the RMA is not installed perform the following procedure:

a. While grasping RMA handle (1), depress handle release button (2) on right side of RMA handle until locking handle (3) is released.

b. Carefully slide RMA (6) into recorder (4) ensuring locking handle (3) engages fork (5).

c. Close and lock locking handle (3).

65124

2-5 INITIAL CHECKS AND SELF TEST.

Self test of the RRSS is performed automatically upon power-up (refer to paragraph 2-6.2, Power-Up). Once the RRSS is on, self test can also be performed by doing a restart (refer to paragraph 2-6.3, Restart). After power-up, check available disk space (refer to paragraph 2-6.10.1, Check Disk Space) and make sure you have enough disk space and recording time remaining to perform your mission.

2-6 OPERATING INSTRUCTIONS.

The following paragraphs describe RRSS operation including:

- ACP display conventions
- power-up
- record
- play back
- commentary
- tabs
- file index utilities
- disk/tape file transfer
- disk utilities
- DISK FULL indicator
- shut down

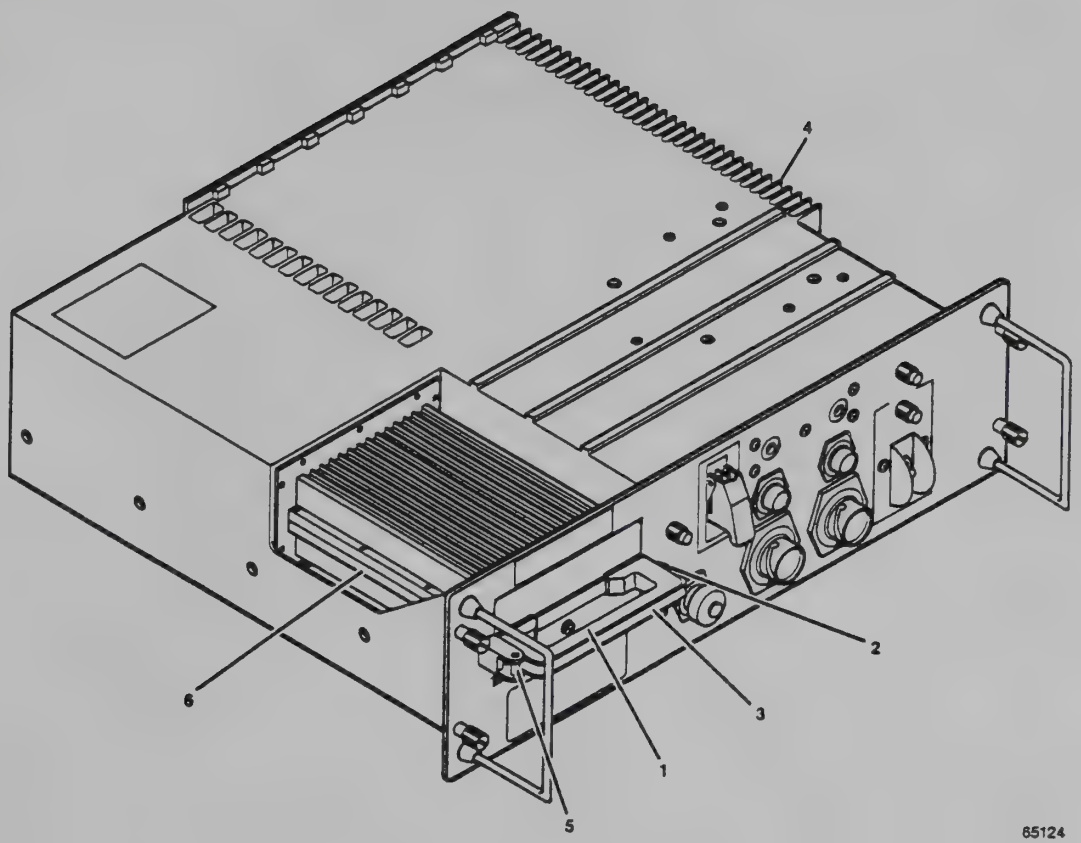

85124

2-6.1 ACP Display Conventions.

The ACP display is divided into six lines. Line one provides status and time during certain operations. Lines two and three display information depending on RRSS operation, such as:

- self test results
- channel set up parameters
- file labels
- disk utilization statistics

Line four displays commands to control operation; lines five and six are not used.

Alerts providing current information about the RRSS or its operation are briefly displayed on line one as needed. Alerts and their significance are listed below:

Alert Message	Significance	Operator Action/Remarks
POWERUP	RRSS has just been turned on or **RESET.**	Wait for RRSS to start Built-In Test (BIT) diagnostics.
BIT IN PROGRESS	BIT is performing diagnostics.	Wait up to 5 minutes for BIT to complete.
SYSTEM PASSED ALL TESTS	RRSS has successfully passed BIT diagnostics.	RRSS ready to operate.
BIT FAILURE: TEST ##	RRSS has failed BIT diagnostics. ## represents a number.	Contact Organizational Support.
DISK ZEROIZE IN PROGRESS	**DISK ERASE** switch flipped; disk is being erased.	Disk erase can take up to one hour.
DISK ZEROIZE COMPLETE	Disk is now completely erased.	A formerly classified disk is now unclassified. All files have been removed.
FORMATTING OF DISK IN PROGRESS	Disk is being formatted for use. New disks are automatically formatted.	Formatting a disk can take up to 20 minutes and erases all of the data. A classified disk cannot be made unclassified by formatting.
DISK FORMAT COMPLETE	Disk is formatted.	Disk is ready for use.
80% DISK CAPACITY	Disk is 80% full.	Delete unnecessary files to recover disk space; **DISK FULL** indicator flashes.
90% DISK CAPACITY	Disk is 90% full.	Delete unnecessary files to recover disk space; **DISK FULL** indicator on steady. Automatic delete pending.
NO AUDIO AVAILABLE	Signal not present on channel selected	Check threshold level of selected channel, if required, lower threshold.
95% DISK RECOVERY FAIL	Disk over 95% full; automatic disk space recovery could not delete enough files to get disk capacity below 80%. Files protected (locked) from automatic deletion.	Halt recordings, unprotect (unlock) and delete unnecessary files, or install new disk. Audio inputs will not be recorded once disk reaches 100% capacity.

The following instructions describe basic ACP operation.

2-6.1.1 Next or Previous Character.

Permits cursor movement to next or previous character during data entry.

Press the **RIGHT ARROW** key to move the cursor to the next character, press the **LEFT ARROW** key to move the cursor to the previous character. In the example below, the cursor is positioned on the **N** in the word COMMENT:

```
FILE       1IMS 2RMS 3IMS 4IMS
F#  COMMENT
033/HERE IS A COMMENT
```

Pressing the **RIGHT ARROW** key moves the cursor to the **T**:

```
FILE       1IMS 2RMS 3IMS 4IMS
F#  COMMENT
033/HERE IS A COMMENT
```

Pressing the **LEFT ARROW** key moves the cursor back to the **N**:

```
FILE       1IMS 2RMS 3IMS 4IMS
F#  COMMENT
033/HERE IS A COMMENT
```

2-6.1.2 Next or Previous Line.

Scrolls file labels, within the search list, up or down.

Press the **DOWN ARROW** key to move to next file label, press the **UP ARROW** key to move to the previous file label. In the example below, the file number (**F#**) **33** is shown:

```
FILE       1IMS 2IMS 3IMS 4IMS
F#  CH OP DATE    START     STOP      LK
033/2 /1 /20FEB91/0107:55.8/0110:00.0/N
```

Pressing the **DOWN ARROW** key moves to the previous file number (**F#**) **32**:

```
FILE        1IMS 2IMS 3IMS 4IMS
F#  CH OP DATE     START      STOP       LK
032/1 /2 /01JAN91/0900:55.8/0959:44.0/N
```

Pressing the **UP ARROW** key moves back to file number (**F#**) **33**:

```
FILE        1IMS 2IMS 3IMS 4IMS
F#  CH OP DATE     START      STOP       LK
033/2 /1 /20FEB91/0107:55.8/0110:00.0/N
```

Files within the search list are scrolled in the chronological order in which they were put on disk, regardless of operator date and time settings associated with them, or file number (refer to paragraph 2-6.8.2, File Search).

2-6.1.3 Next or Previous Field.

Scrolls through fields; used to select commands and fields during data entry.

Press the **TAB** key to move the cursor right to next field, simultaneously press the **CODE** and **TAB** keys to move the cursor left to the previous field. In the example below the cursor is on the operator field (**OP**) **2**:

```
FILE        1IMS 2IMS 3IMS 4IMS
F#  CH OP DATE     START      STOP       LK
032/1 /2 /01JAN91/0900:55.8/0959:44.0/N
```

Pressing the **TAB** key moves the cursor right to the first character of the next field, date (**DATE**) **01JAN91**:

```
FILE        1IMS 2IMS 3IMS 4IMS
F#  CH OP DATE     START      STOP       LK
032/1 /2 /01JAN91/0900:55.8/0959:44.0/N
```

Simultaneously pressing the **CODE** and **TAB** keys moves cursor back to the operator field (**OP**) **2**:

```
FILE        1IMS 2IMS 3IMS 4IMS
F#  CH OP DATE     START      STOP       LK
032/1 /2 /01JAN91/0900:55.8/0959:44.0/N
```

If the cursor is on the last field or command it cycles back to the first field or command.

2-6.1.4 Scroll Preset Values.

Scrolls, displays, and permits selection of preset data values in lines two three and four during certain operations.

Press the **UP ARROW** or the **DOWN ARROW** keys to display next or previous (higher or lower) preset value where the cursor is positioned (refer to paragraph 2-6.2.3, Next or Previous Field). In the example below, the cursor is positioned on delay (**DELAY**) setting **0.4**:

```
SET UP      1IMS 2IMS 3IMS 4IMS
CH MODE GAPS THRESHOLD DELAY BRIDGE
2   M    S       00      0.4    5.0
RCV1  RCV2  RCV3  RCV4  COMM
```

Pressing the **UP ARROW** key scrolls to next higher delay (**DELAY**) value **0.5**:

```
SET UP      1IMS 2IMS 3IMS 4IMS
CH MODE GAPS THRESHOLD DELAY BRIDGE
2   M    S       00      0.5    5.0
RCV1  RCV2  RCV3  RCV4  COMM
```

Pressing the **DOWN ARROW** key scrolls back to lower delay (**DELAY**) value **0.4**:

```
SET UP      1IMS 2IMS 3IMS 4IMS
CH MODE GAPS THRESHOLD DELAY BRIDGE
2   M    S       00      0.4    5.0
RCV1  RCV2  RCV3  RCV4  COMM
```

2-6.1.5 Enter Data (Characters).

After positioning the cursor (refer to paragraph 2-6.1.1, Next or Previous Character) press keyboard character corresponding to the character you want to enter. The character is inserted and the cursor moves to the right. If the cursor is already positioned on a character, it will be replaced by a new keyboard character entered and cursor moves to the right, unless at last character position in the field. In the example below, the cursor is positioned on the **C** in the word **C**OMMENT:

```
FILE       1IMS 2RMS 3IMS 4IMS
F#  COMMENT
033/HERE IS A COMMENT
```

Pressing the **X** key changes the **C** to a **X**:

```
FILE       1IMS 2RMS 3IMS 4IMS
F#  COMMENT
033/HERE IS A XOMMENT
```

2-6.1.6 Delete Data (Characters).

After positioning the cursor (refer to paragraph 2-6.2.1. Next or Previous Character) press the **BACK SP** key to delete the character the cursor is on. In the example below, the cursor is positioned on the **C** in the word COMMENT:

```
FILE       1IMS 2RMS 3IMS 4IMS
F#  COMMENT
033/HERE IS A COMMENT
```

Pressing the **BACK SP** key deletes the **C** and characters to the right are shifted left so the cursor is positioned on the **O**:

```
FILE       1IMS 2RMS 3IMS 4IMS
F#  COMMENT
033/HERE IS A OMMENT
```

2-6.2 Power-Up.

The following procedure explains how to turn the RRSS on and what happens during the normal power-up sequence.

NOTE

Contact Organizational Maintenance if the message **SYSTEM PASSED ALL TESTS** does not appear.

a. Set the **ON/OFF** circuit breaker (1) to **ON**.

65118

b. The **POWER** indicator (2) illuminates and after a few seconds the message **POWERUP** briefly appears in the ACP display:

c. The **DISK FULL** indicator (3) and the **FAULT** indicator (4) briefly comes on and the ACP display indicates **BIT IN PROGRESS** during self-test:

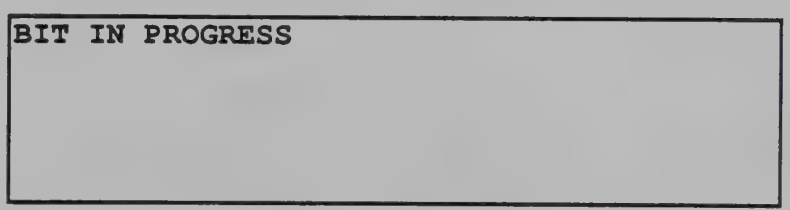

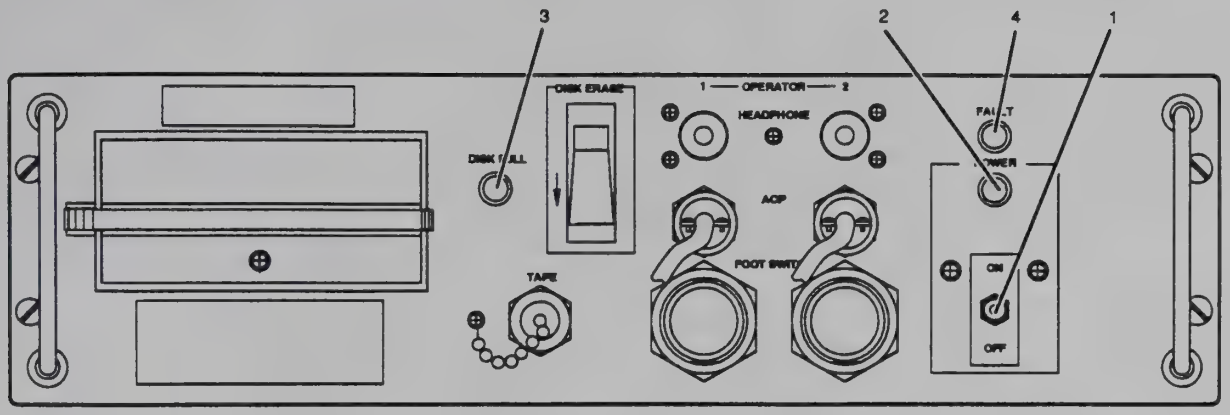

65118B

NOTE

If an unformatted disk is inserted and the RRSS turned on, the disk is formatted during power-up and self-test; this can take 20 minutes. The ACP display cursor will blink and then the massage **BIT IN PROGRESS** briefly appears in line one:

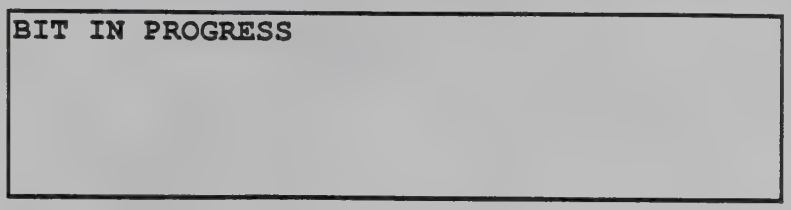

followed by the message **FORMATTING OF DISK IN PROGRESS**:

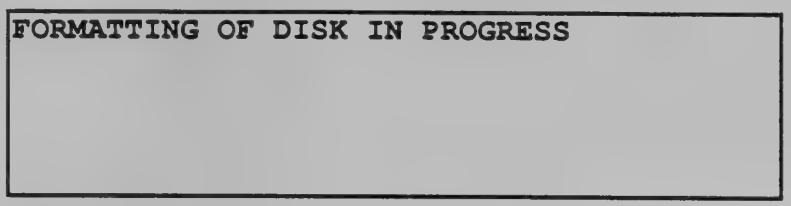

The message **DISK FORMAT COMPLETE** appears when the disk is formatted:

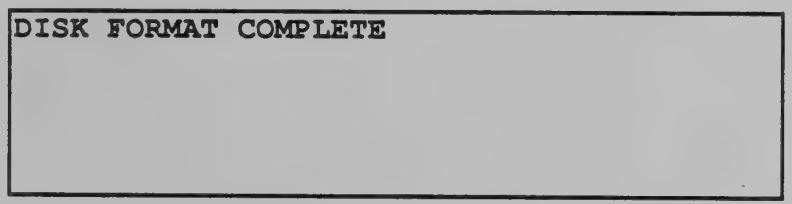

followed by the message **POWERUP 1IMS 2IMS 3IMS 4IMS**:

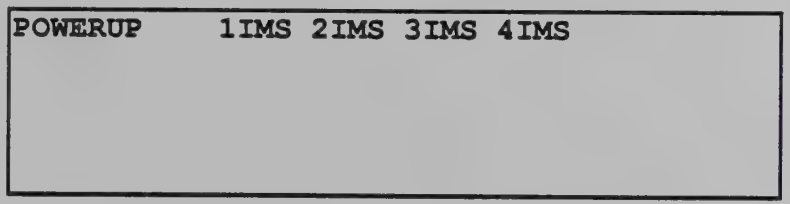

BIT resumes after formatting is complete.

d. When self-test is successfully completed (it can take up to five minutes) the ACP briefly indicates **SYSTEM PASSED ALL TESTS:**

```
SYSTEM PASSED ALL TESTS
```

NOTE

Contact Organizational Maintenance if the message **SYSTEM PASSED ALL TESTS** does not appear

e. The RRSS is ready to accept the current date and time when the ACP indicates as shown below with the blinking cursor positioned at the beginning of the default date (**01JAN91**) in line four:

```
POWERUP     1IMS 2IMS 3IMS 4IMS

          DT:01JAN91 TM:0000:00Z
```

f. Enter the current Zulu date (**DT**) and time (**TM**) in the following format:

```
POWERUP     1IMS 2IMS 3IMS 4IMS

          DT:DDMMMYY TM:HHMM:SSZ
```

DD = day (valid entries 00 to 31)

MMM = month (valid entries JAN, FEB, MAR, APR, MAY, JUN, JUL, AUG, SEP, OCT, NOV, DEC)

YY = year (valid entries 00 to 99)

HH = hour (valid entries 00 to 23)

MM = minute (valid entries 00 to 59)

SS = second (valid entries 00 to 59)

Press the **TAB** key to move the cursor between the date and time areas; press the **LEFT ARROW** and the **RIGHT ARROW** keys to move the cursor within the date and time areas. Position the cursor on the character you want to change and enter the new character. The new character will replace the old.

g. Press the **RETURN** key after entering the correct date and time. You must press the **RETURN** key to proceed with RRSS operation, even if you do not change the automatically set default date and time. The RRSS is ready to operate when the display looks similar to this:

```
FILE        1IMS 2IMS 3IMS 4IMS
F#  CH OP DATE     START      STOP       LK
   /  /  /        /    :     /    :     /
```

(1) If an invalid or out of range date or time entry is made the message **INVALID PARAMETER** appears in line one:

```
INVALID PARAMETER

          DT:51JAK99 TM:P000:00Z
```

(2) Reset date and time using valid entries (see step f above).

2-6.3 Restart.

Restart resets the RRSS (equivalent to shutting down and powering up), starts self test, and permits resetting date and time from the ACPs.

NOTE

Restart will not work during playback, recording, format, disk erase, or BIT. The message **NO RESTART - PLAYBACK IN PROGRESS** will appear on line one if recording or playback is in progress:

```
NO RESTART - PLAYBACK IN PROGRESS
F#   CH OP DATE     START      STOP       LK
033/2 /1 /01JAN91/0602:09.8/0000:00.0/N
```

There will be no message during format, disk erase, or BIT.

Stop playback (refer to paragraph 2-6.5.8, Stop Playback), or recording (refer to paragraphs 2-6.4, Record Signals), or wait until formatting, disk erase or BIT is complete and then reinitiate restart.

a. Simultaneously press the **CTRL**, **CODE** and **ESC** keys to initiate restart. The ACP will go blank and then indicate **BIT IN PROGRESS**:

```
BIT IN PROGRESS
```

b. When self test is successfully completed (it can take up to five minutes) the ACP briefly indicates **SYSTEM PASSED ALL TESTS:**

```
SYSTEM PASSED ALL TESTS
```

NOTE

Contact Organizational Maintenance if the message **SYSTEM PASSED ALL TESTS** does not appear

c. Upon successful RRSS restart, line one indicates **POWERUP** and shows received channels initialized with system defaults, and line four shows the default date (**DT** = date) and time (**TM** = time):

```
POWERUP      1IMS 2IMS 3IMS 4IMS

          DT:01JAN91 TM:0000:00Z
```

The current date and time can now be entered (refer to paragraph 2-6.2, Power-Up, steps e through g).

2-6.4 Record.

The following instructions describe how to:

- Set up receive channels
- Start manual recording
- Stop recording

2-6.4.1 Set Up Receive Channels.

Prior to recording a signal, the applicable input channel (receiver) must be set up for the desired recording configuration. To configure a channel, perform the following procedure:

a. Simultaneously press the **CODE** and **CHN** (**H**) keys to set up input channels. Line one shows **SET UP**, the cursor is positioned at **RCV1** on line four:

```
SET UP      1IMS 2IMS 3IMS 4IMS
CH MODE GAPS THRESHOLD DELAY BRIDGE
1   M    S       00       0.5   5.0
RCV1  RCV2  RCV3  RCV4  COMM
```

b. Press the **TAB** key to move the cursor between **RCV1** and **RCV4** (refer to paragraph 2-6.6, Commentary for information about **COMM**). The cursor will move to the right until the end of the line and then return to the beginning of the line. Position the cursor on the desired channel and press the **RETURN** key. In the example below, channel **RCV2** was selected, as indicated in line three by the **2** below **CH** and the cursor is positioned on the **M** in line three under **MODE**:

```
SET UP      1IMS 2IMS 3IMS 4IMS
CH MODE GAPS THRESHOLD DELAY BRIDGE
2   M    S       00       0.5   5.0
RCV1  RCV2  RCV3  RCV4  COMM
```

c. Press the **TAB** key to move the cursor between the values on line three under **MODE**, **GAPS**, **THRESHOLD**, **DELAY**, and **BRIDGE** :

```
SET UP      1IMS 2IMS 3IMS 4IMS
CH MODE GAPS THRESHOLD DELAY BRIDGE
2   M    S       00       0.5   5.0
RCV1  RCV2  RCV3  RCV4  COMM
```

The cursor will move to the right until the end of line and then return to the **M** in line three under **MODE.**

Positioning the cursor under the set up options allows changing their values. Simultaneously pressing the **CODE** and **DOWN ARROW** keys moves the cursor back to line four for additional channel setup (see step b above).

The following paragraphs describe how to set **MODE**, **GAPS**, **THRESHOLD**, **DELAY**, and **BRIDGE** after selecting the desired channel.

RECORD

2-6.4.1.1 MODE.

Mode selection chooses how the selected channel will begin recording, A (Automatic), M (Manual), or F (Foot Switch). In automatic mode, recording starts whenever a signal over the preset threshold level is received (refer to paragraphs 2-6.4.1.3, Threshold, 2-6.4.1.4, Delay, and 2-6.4.1.5, Bridge). In manual mode, recording is started by operator entry at the host system or ACP (refer to paragraph 2-6.4.2,Start Manual Recording). In foot switch mode, recording is started by pressing the foot switch. To select the channel mode, perform the following procedures.

a. Press the **TAB** key until the cursor is positioned on the **M** in line three under **MODE**:

```
SET UP      1IMS 2IMS 3IMS 4IMS
CH MODE GAPS THRESHOLD DELAY BRIDGE
2   M    S       00       0.5   5.0
RCV1  RCV2  RCV3  RCV4  COMM
```

b. Press the **UP ARROW** or the **DOWN ARROW** keys to select either **M** (Manual), **A** (Automatic) or **F** (Foot Switch) record mode. If you don't change the mode, the RRSS automatically defaults to **M**.

c. The selected channel mode is updated in the second character position of the status information on line one for that particular channel. In the example below, the channel **2** mode has been changed to **F**; the channel **2** status information in line one is correspondingly updated:

```
SET UP      1IMS 2IFS 3IMS 4IMS
CH MODE GAPS THRESHOLD DELAY BRIDGE
2   F    S       00       0.5   5.0
RCV1  RCV2  RCV3  RCV4  COMM
```

d. Operator 1 can select **F** for channels RCV1 and RCV2, and operator 2 can select **F** for channels RCV3 and RCV4, however, either operator can only select **F** for one channel at a time. If an operator selects a wrong channel, or attempts to select a second channel, the message **INVALID FOOT SWITCH CONDITION** appears in line one:

```
INVALID FOOT SWITCH CONDITION
CH MODE GAPS THRESHOLD DELAY BRIDGE
2   F    S       00       0.5   5.0
RCV1  RCV2  RCV3  RCV4  COMM
```

NOTE

If you change to automatic mode (**A**) while recording in manual mode (**M**) the current file closes and a new file opens for automatic record. If you change to manual mode (**M**) while recording in automatic mode (**A**) the current file closes and recording stops.

Once the first or last (maximum or minimum) preset value has been reached, pressing the **UP ARROW** or the **DOWN ARROW** keys will have no effect and the RRSS will continue to display the current value. The RRSS automatically implements the preset value displayed.

2-6.4.1.2 GAPS.

Gaps are periods of silence within a signal, as in pauses in a conversation. **G** (Gaps) records the entire received signal, including periods of silence. **S** (gaps Suppressed) omits periods of silence and records only the audio portion above the threshold setting for the received signal; choosing **S** can save on disk space. Gaps in commentary are automatically suppressed. To select gaps or gaps suppressed, perform the following procedure.

a. Press the **TAB** key until the cursor is positioned on the **G** in line three under **GAPS**:

```
SET UP      1IMS 2IMG 3IMS 4IMS
CH MODE GAPS THRESHOLD DELAY BRIDGE
2   M    G       00       0.5   5.0
RCV1  RCV2  RCV3  RCV4  COMM
```

b. Press the **UP ARROW** or the **DOWN ARROW** keys to select either **G** or **S**.

If you don't change gap the RRSS automatically defaults to **G**.

c. The choice of **G** or **S** for the selected channel is updated in the third character position of the status information on line one for that particular channel. In the example below, channel **2** gaps are suppressed (**S**); the channel **2** status information in line one is correspondingly updated:

```
SET UP      1IMS 2IAS 3IMS 4IMS
CH MODE GAPS THRESHOLD DELAY BRIDGE
2   A    S       00       0.5   5.0
RCV1  RCV2  RCV3  RCV4  COMM
```

Once the first or last (maximum or minimum) preset value has been reached, pressing the **UP ARROW** or the **DOWN ARROW** keys will have no effect and the RRSS will continue to display the current value. The RRSS automatically implements the preset value displayed.

2-6.4.1.3 THRESHOLD.

The threshold setting determines RRSS sensitivity to received signals in the automatic (**A**) recording mode (refer to paragraph 2-6.4.1.1, Mode) and establishes gaps. The threshold value of 0 is based on a power level slightly above the RRSS thermal noise. If the threshold is set too low, useless files will be created by noise; if threshold is set too high, valid signals may go unrecorded. To select the channels threshold level, perform the following procedure.

a. Press the **TAB** key until the cursor is positioned on the first **0** in line three under **THRESHOLD**:

```
SET UP      1IMS 2IAS 3IMS 4IMS
CH MODE GAPS THRESHOLD DELAY BRIDGE
2   A    S       00       0.5   5.0
RCV1  RCV2  RCV3  RCV4  COMM
```

b. Press the **UP ARROW** or the **DOWN ARROW** keys to select channel activity threshold level: **0**, **3**, **6**, **9**, or **12** dB.

If you don't change the threshold, the RRSS automatically defaults to 0.

Once the first or last (maximum or minimum) preset value has been reached, pressing the **UP ARROW** or the **DOWN ARROW** keys will have no effect and the RRSS will continue to display the current value. The RRSS automatically implements the preset value displayed.

2-6.4.1.4 DELAY.

The delay sets how long a signal must be above the threshold for a new file to be created and recording to begin in the automatic (**A**) recording mode (refer to paragraph 2-6.4.1.1, Mode). Delay prevents creation of unwanted files caused by sporadic noise spikes. To select the channel delay time, perform the following procedure.

a. Press the **TAB** key until the cursor is positioned on the first **0** in line three under **DELAY**:

```
SET UP      1IMS 2IAS 3IMS 4IMS
CH MODE GAPS THRESHOLD DELAY BRIDGE
2   A    S       00      0.5   5.0
RCV1  RCV2  RCV3  RCV4  COMM
```

b. Press the **UP ARROW** or the **DOWN ARROW** keys to select delay time: **0.0**, **0.1**, **0.2**, **0.3**, **0.4**, or **0.5** seconds.

If you don't change the delay the RRSS automatically defaults to 0.5.

Once the first or last (maximum or minimum) preset value has been reached, pressing the **UP ARROW** or the **DOWN ARROW** keys will have no effect and the RRSS will continue to display the current value. The RRSS automatically implements the preset value displayed.

2-6.4.1.5 BRIDGE.

The bridge sets how long a signal must be below the threshold before recording stops and the current file closes in the automatic (**A**) recording mode (refer to paragraph 2-6.4.1.1, Mode). To select the channel bridge time, perform the following procedure.

a. Press the **TAB** key until the cursor is positioned on the **5** in line three under **BRIDGE**:

```
SET UP      1IMS 2IAS 3IMS 4IMS
CH MODE GAPS THRESHOLD DELAY BRIDGE
2   A    S       00      0.5   5.0
RCV1  RCV2  RCV3  RCV4  COMM
```

b. Press the **UP ARROW** or **DOWN ARROW** keys to select **BRIDGE** time: **0.1**, **0.3**, **0.5**, **1.0**, **2.0**, **3.0**, **4.0** ,or **5.0** seconds.

If you don't change the bridge the RRSS automatically defaults to 5.0.

Once the first or last (maximum or minimum) preset value has been reached, pressing the **UP ARROW** or the **DOWN ARROW** keys will have no effect and the RRSS will continue to display the current value. The RRSS automatically implements the preset value displayed.

2-6.4.2 Start Manual Recording.

Recording can be manually started from a host controller, the ACPs, or the foot switches. The following paragraphs provide instructions on starting a recording manually.

2-6.4.2.1 Recording Using Host Controller.

To initiate record from a host controller, refer to the applicable host system technical manual for specific procedures.

2-6.4.2.2 Start Recording Using ACP.

a. Set up the channel you want to record for **M** (Manual) mode (refer to paragraph 2-6.4.1.1, Mode).

NOTE

If recording is in progress on the selected channel and start record is issued, the recording will stop. Record start and stop is a toggle function.

b. Simultaneously press the **CODE** key and applicable channel key, **1**, **2**, **3**, or **4** (**RC1**, **RC2**, **RC3**, **RC4**) to start recording audio from the selected channel. In the example below, channel 2 (**RC2**) was selected for recording, as indicated by **R** (for recording) in the channel 2 status information on line one and **2** in line three under **CH** (CHannel):

```
FILE        1IMS 2RMS 3IMS 4IMS  2100:54Z
F#  CH OP DATE     START      STOP       LK
033/2 /1 /01JAN91/0602:09.8/0000:00.0/N
```

NOTE

If playback is not in progress when start record is issued, playback of the file being recorded will be started on the applicable operator's output channel (refer to paragraph 2-6.4.1, Start Playback of in Progress Recording).

c. Recording information is shown on the display including:

- current position of cursor within file
- message file number
- channel file is recording from
- operator who started recording
- date recording began
- time recording began
- time recording stopped
- If file is locked or not

In the example below, the time in line one shows **0108:55Z**, while the time in line three (under **START**) shows **0107:55**, indicating one minute has passed since recording began. The file number (under **F#**) is **33**, recording on channel (under **CH**) **2**, started by operator **1** (under **OP**) on **01JAN91** (under **DATE**). The **STOP** time shows **0000:00.0**, indicating recording is still in progress.

```
FILE        1IMS 2RMS 3IMS 4IMS  0108:55Z
F#  CH OP DATE     START      STOP       LK
033/2 /1 /01JAN91/0107:55.8/0000:00.0/N
```

Additional information may be entered for the file, refer to paragraph 2-6.4.2 Complete File Label.

d. If there is no audio signal above threshold and gap suppression is invoked on the selected channel the message **NO AUDIO AVAILABLE** appears on line one:

```
NO AUDIO AVAILABLE
F#  CH OP DATE     START      STOP       LK
033/2 /1 /01JAN91/0107:55.8/0000:00.0/N
```

2-6.4.2.3 Start Recording Using Foot Switch.

NOTE

If recording is in progress on the selected channel and start record is issued, the recording will stop. Record start and stop is a toggle function.

a. Set up the channel you want to record for **F** (Foot switch) mode (refer to paragraph 2-6.4.1.1, Mode).

b. Press the applicable foot switch to start recording. Line one will indicate selected channel (channel 2 in example below) is recording (**R**) in foot switch (**F**) mode:

```
FILE        1IMS 2RFS 3IMS 4IMS  2100:54Z
F#  CH OP DATE     START      STOP       LK
033/2 /1 /01JAN91/0602:09.8/0000:00.0/N
```

NOTE

Operator 1 foot switch controls record start and stop for input channels 1 or 2, operator 2 foot switch controls record start and stop for input channels 3 or 4.

If playback is not in progress when start record is issued, playback of the file being recorded will be started on the applicable operator's output channel (refer to paragraph 2-6.5.1, Start Playback of In-Progress Recording).

2-6.4.4 Stop Manual Recording.

Recording can be manually stopped from a host system, the ACPs, or the foot switches. The following paragraphs provide instructions on stopping a recording manually.

2-6.4.4.1 Stop Recording Using Host System.

To stop record from the host system, refer to the applicable host system technical manual for specific procedures.

2-6.4.4.2 Stop Recording Using ACP.

NOTE

If the selected channel is in the A or F mode, the mode will be changed to M and recording will stop.

If recording is not in progress on the selected channel and stop record is issued, the recording will start. Record start and stop is a toggle function.

a. Simultaneously press the **CODE** and applicable channel key, **1**, **2**, **3**, or **4** (**RC1**, **RC2**, **RC3**, **RC4**) to stop recording audio from the selected channel. The **R** in line one associated with a channel will change to an

I to indicate the channel is inactive and recording is stopped. In the example below, channel 2 (**RC2**) was selected for recording, as indicated by **R** (for record) in the channel 2 status information:

```
FILE       1IMS 2RMS 3IMS 4IMS  2100:54Z
F#  CH OP DATE    START     STOP      LK
033/2 /1 /01JAN91/0602:09.8/0000:00.0/N
```

The **R** changes to an **I** when recording is stopped:

```
FILE       1IMS 2IMS 3IMS 4IMS  2100:54Z
F#  CH OP DATE    START     STOP      LK
033/2 /1 /01JAN91/0602:09.8/0000:00.0/N
```

b. The displayed stop time is not automatically updated to reflect recording has stopped. In the example below, the recording of file number 138 stopped as indicated by the **I** in line one for receiver channel 1, however the stop time still indicates **0000:00.0**:

```
FILE       1IMS 2IMS 3IMS 4IMS  0919:59Z
F#  CH OP DATE    START     STOP      LK
138/1 /2 /14SEP92/0927:27.9/0000:00.0/N
```

The stop time will be updated the next time the file label is displayed. Simultaneously pressing the **CODE** and **FLE** (**F**) keys will redisplay the file label:

```
FILE       1IMS 2IMS 3IMS 4IMS  0919:59Z
F#  CH OP DATE    START     STOP      LK
138/1 /2 /14SEP92/0927:27.9/0927:53.6/N
```

2-6.4.4.3 Stop Recording Using Foot Switch.

NOTE

If recording is not in progress on the selected channel and stop record is issued, the recording will start. Record start and stop is a toggle function.

Press the applicable foot switch to stop recording. The status information in line one updates to an **I** to indicate the channel is idle and recording has stopped, the channel mode indicates **F** for foot switch:

```
FILE        1IMS 2IFS 3IMS 4IMS  2100:54Z
F#  CH OP DATE     START      STOP       LK
033/2 /1 /01JAN91/0602:09.8/0000:00.0/N
```

NOTE

Operator 1 foot switch controls record start and stop for input channels 1 or 2, operator 2 foot switch controls record start and stop for input channels 3 or 4.

2-6.5 Play Back.

Playback permits listening to files currently being recorded or a previously recorded file. Refer to paragraph 2-6.7, Tabs for instructions on tab operations to manipulate a file during playback.

NOTE

Play back is automatically invoked when any type of record is started. Unless manually stopped, the playback function continues even when recording is stopped.

It can take a few seconds for commentary (refer to paragraph 2-6.6 , Commentary) to be merged with its associated recording file. The message **NO FILE FOR COMMENTARY** appears in line one when playback is attempted before commentary merging is complete:

```
NO FILE FOR COMMENTARY
F#  CH OP DATE     START      STOP       LK
138/1 /2 /14SEP92/0927:27.9/0927:53.6/N
PLAYBACK CH:1 NUM:138
```

2-6.5.1 Start Playback of In-Progress Recording.

NOTE

If playback is in progress and start playback is issued, playback will stop. Playback start and stop is a toggle function.

a. Simultaneously press the **CODE** and **PBK** (**0**) keys. Line four indicates **PLAYBACK**, and the cursor is placed on channel number (**CH**) **1**:

```
FILE        1RMS 2IMS 3IMS 4IMS
F#  CH OP DATE     START      STOP       LK
138/1 /2 /14SEP92/0927:27.9/0927:53.6/N
PLAYBACK CH:1 NUM:138
```

NOTE

The number of the most recently recorded file is indicated by **NUM** (file number **138** in example below):

```
FILE        1RMS 2IMS 3IMS 4IMS
F#  CH OP DATE     START      STOP       LK
138/1 /2 /14SEP92/0927:27.9/0927:53.6/N
PLAYBACK CH:1 NUM:138
```

The **NUM** field is used to playback a previously recorded file (refer to paragraph 2-6.5.2, Start Playback of Previously Recorded File).

b. Press the **1**, **2**, **3**, or **4** key to select a channel currently being recorded, then press the **RETURN** key to playback the channel. In the example below file number **138** on channel **1**, currently being recorded, is played back. Notice the time in line one elapses from the **START** time in line three. The **0000:00.0 STOP** time indicates the channel is currently being recorded:

```
FILE        1RMS 2IMS 3IMS 4IMS  0927:31Z
F#  CH OP DATE     START      STOP       LK
138/1 /2 /14SEP92/0927:27.9/0000:00.0/N
```

c. When the file being played back catches up with the file being recorded (due to a playback speed >1.0) the playback will automatically change to 1.0 times. An **M** (Monitor) will be displayed next to the playback time to indicate real-time playback (monitoring) of the incoming signal is in progress.

```
FILE        1RMS 2IMS 3IMS 4IMS M0927:31Z
F#  CH OP DATE     START      STOP       LK
138/1 /2 /14SEP92/0927:27.9/0000:00.0/N
```

NOTE

When the RRSS initiates monitoring, manipulation of the playback (tab, speed, pitch, etc.) is disabled.

d. If there is no recording in progress on the selected channel the message **CHANNEL NOT RECORDING** briefly appears in line one:

```
CHANNEL NOT RECORDING
F#  CH OP DATE     START      STOP       LK
   /  /  /       /    :   . /   :   . /
```

Then line one will show recording status of the four input channels (all idle in the example below):

```
FILE        1IMS 2IMS 3IMS 4IMS
F#  CH OP DATE     START      STOP       LK
   /  /  /       /    :   . /   :   . /
```

Simultaneously press the **CODE** and **PBK** (**0**) keys to cancel the playback command.

2-6.5.2 Start Playback of Previously Recorded File.

NOTE

If playback is in progress and start playback is issued, playback will stop. Playback start and stop is a toggle function.

a. Simultaneously press the **CODE** and **PBK** (**0**) keys. Line four indicates **PLAYBACK**, and the cursor is placed on channel number (**CH: 1**) :

```
FILE        1IMS 2IMS 3IMS 4IMS
F#  CH OP DATE     START      STOP       LK
138/1 /2 /14SEP92/0927:27.9/0927:53.6/N
PLAYBACK CH:1 NUM:138
```

The **CH:** (channel) field is used to playback an in progress recording (refer to paragraph 2-6.5.1, Start Playback of In-Progress Recording).

b. Press the **TAB** key to move the cursor from **CH:** to **NUM**. Enter the file number of the file you want to playback (file number **138** in example below):

```
FILE        1IMS 2IMS 3IMS 4IMS
F#  CH OP DATE     START      STOP       LK
138/1 /2 /14SEP92/0927:27.9/0927:53.6/N
PLAYBACK CH:1 NUM:138
```

If you make a mistake use the **RIGHT ARROW** and **LEFT ARROW** keys to position the cursor and reenter the data (refer to paragraph 2-6.2.1, Next or Previous Character). Use the **BACK SP** key to delete data (refer to paragraph 2-6.2.6, Delete Data). If you do not enter a file number the RRSS automatically places the file number of the latest file placed on disk, regardless of operator date and time settings (number **138** in example above).

c. Press the **RETURN** key after entering the file number. The file is played back and the time in line one elapses, beginning from start time and ending with stop time in line three, indicating the current position within the file:

```
FILE        1IMS 2IMS 3IMS 4IMS  0927:34Z
F#  CH OP DATE     START      STOP       LK
138/1 /2 /14SEP92/0927:27.9/0928:53.6/N
PLAYBACK CH:1 NUM:138
```

d. If the file number does not correspond to any previously recorded file the message **FILE NOT FOUND** appears on line one:

```
FILE NOT FOUND
F#  CH OP DATE     START      STOP       LK
   /  /  /        /    :   . /   :   . /
```

Then line one will show recording status of the four input channels (all idle in the example below) and time of last activity:

```
FILE        1IMS 2IMS 3IMS 4IMS  0059:59Z
F#  CH OP DATE     START      STOP       LK
   /  /  /        /    :   . /   :   . /
```

Simultaneously press **CODE** and **PBK** (**0**) keys to cancel the playback command.

2-6.5.3 Adjust Playback Volume.

a. Simultaneously press the **CODE** and **VOL** (**V**) keys. Line four indicates **PLAY VOLUME:5** and **COMM VOLUME:5**, and the cursor is placed on the play volume default setting of **5**:

```
FILE        1IMS 2IMS 3IMS 4IMS  0704:15Z
F#  CH OP DATE     START      STOP       LK
142/1 /2 /14SEP92/0702:57.4/0000:00.0/N
PLAY VOLUME:5     COMM VOLUME:5
```

b. Press the **UP ARROW** or the **DOWN ARROW** keys to select a playback volume level of **0**, **1**, **2**, **3**, **4**, **5**, 6, **7**, **8**, or **9**. **0** indicates the volume is turned off, **9** is the loudest.

If you don't change the playback volume, the RRSS automatically defaults to 5.

Once the first or last (maximum or minimum) preset value has been reached, pressing the **UP ARROW** or the **DOWN ARROW** keys will have no effect and the RRSS will continue to display the current value. The RRSS automatically implements the preset value displayed.

c. To set the commentary volume, press the **TAB** key to move the cursor from **PLAY VOLUME:** to **COMM VOLUME**:. Press the **UP ARROW** or the **DOWN ARROW** keys to select a commentary volume level **0**, **1**, **2**, **3**, **4**, **5**, **6**, **7**, **8**, or **9**. **0** setting indicates the volume is turned off, **9** is the loudest.

If you don't change the commentary volume, the RRSS automatically defaults to 5.

Once the first or last (maximum or minimum) preset value has been reached, pressing the **UP ARROW** or the **DOWN ARROW** keys will have no effect and the RRSS will continue to display the current value. The RRSS automatically implements the preset value displayed.

New volume settings apply to the playback in progress and become default settings for subsequent playbacks on the selected channels until changed.

2-6.5.4 Adjust Playback Speed and Pitch.

a. Simultaneously press the **CODE** and **SPP (N)** keys. Line four indicates **SPEED:1.0** and **PITCH:05**, with the cursor placed on the speed default setting of **1.0**:

```
FILE        1IMS 2IMS 3IMS 4IMS  0704:15Z
F#  CH OP DATE     START      STOP       LK
142/1 /2 /14SEP92/0702:57.4/0000:00.0/N
SPEED:1.0  PITCH:05
```

b. Press the **UP ARROW** or the **DOWN ARROW** keys to select a playback speed of **0.5**, **0.6**, **0.7**, **0.8**, **0.9**, **1.0**, **1.5**, **2.0**, **2.5**, or **3.0** times the recorded speed.

If you don't change speed, the RRSS automatically defaults to 1.0.

Once the first or last (maximum or minimum) preset value has been reached, pressing the **UP ARROW** or the **DOWN ARROW** keys will have no effect and the RRSS will continue to display the current value. The RRSS automatically implements the preset value displayed.

c. To set the pitch, press the **TAB** key to move the cursor from **SPEED:** to **PITCH:**. Press the **UP ARROW** or the **DOWN ARROW** keys to select a playback pitch of **0**, **1**, **2**, **3**, **4**, **5**, **6**, **7**, **8**, **9**, or **10**.

If you don't change pitch the RRSS automatically defaults to 5.

Once the first or last (maximum or minimum) preset value has been reached, pressing the **UP ARROW** or the **DOWN ARROW** keys will have no effect and the RRSS will continue to display the current value. The RRSS automatically implements the preset value displayed.

New speed and pitch settings apply to playback in progress and become default settings for subsequent playbacks on the selected channels until changed.

2-6.5.5 Reinsert Gaps.

Gaps suppressed during recording (refer to paragraph 2-6.4.1.2, Gaps) can be reinserted during playback. White noise is used to fill the gaps during reinsertion. Gaps in both the received and commentary portions of a playback are inserted. Gaps are reinserted up to a selectable maximum length. When any portion of a gap is skipped, either because gap insertion is set to zero or the gap length exceeds the maximum gap insertion time, you will hear a beep (monotone). Playback volume settings have no effect on gap beep volume. If the gap is less than the set gap length, you will get a gap (silence) instead of the beep. To set the gap reinsertion length, perform the following procedure.

a. Simultaneously press **CODE** and **GAP (I)** keys. Line four indicates **GAP SELECT GAP:F** with the cursor placed on the **F**:

```
FILE        1IMS 2IMS 3IMS 4IMS  0704:15Z
F#  CH OP DATE     START      STOP       LK
142/1 /2 /14SEP92/0702:57.4/0000:00.0/N
GAP SELECT GAP:F
```

b. Press the **UP ARROW** or the **DOWN ARROW** keys to select **F**, **5**, **4**, **3**, **2**, **1**, or **0**. **F** fully reinserts gaps, **0** indicates no gaps are inserted (gaps suppressed), and **1** through **5** sets inserted gap maximum length in seconds.

If you don't change gap the RRSS automatically defaults to **F**.

Once the first or last (maximum or minimum) preset value has been reached, pressing the **UP ARROW** or the **DOWN ARROW** keys will have no effect and the RRSS will continue to display the current value. The RRSS automatically implements the preset value displayed.

New gap insertion settings apply to the playback in progress and become established settings for subsequent playbacks on the selected channel until changed.

2-6.5.6 Pause/Resume Playback.

a. Simultaneously press the **CODE** and **PSE** (**P**) keys to pause playback and commentary. The time in line one is stopped the moment playback is paused:

```
FILE        1IMS 2IMS 3IMS 4IMS  0704:15Z
F#  CH OP DATE     START      STOP       LK
142/1 /2 /14SEP92/0702:57.4/0731:16.0/N
```

b. Once paused, simultaneously press the **CODE** and **PSE** (**P**) keys again to resume playback and commentary. The time in line one starts elapsing again, indicating playback has resumed:

```
FILE        1IMS 2IMS 3IMS 4IMS  0704:16Z
F#  CH OP DATE     START      STOP       LK
142/1 /2 /14SEP92/0702:57.4/0731:16.0/N
```

If you pause playback while a file is recording the playback will pause but the recording will continue, if you resume playback it will resume from the moment of pause, not from where you are currently recording.

2-6.5.7 Stop Playback.

NOTE

If playback is not in progress and stop playback is issued, playback will start. Playback start and stop is a toggle function.

a. Simultaneously press the **CODE** and **PBK** (**0**) keys to stop playback and any associated commentary.

b. The time information in line one is updated to reflect playback has stopped. For example, during playback the time in line one elapses to indicate playback is in progress:

```
FILE        1RMS 2IMS 3IMS 4IMS  0927:31Z
F#  CH OP DATE     START      STOP       LK
140/1 /2 /14SEP92/0927:27.9/0000:00.0/N
```

The time will disappear when playback is stopped:

```
FILE        1RMS 2IMS 3IMS 4IMS
F#  CH OP DATE    START     STOP      LK
140/1 /2 /14SEP92/0927:27.9/0928:00.0/N
```

2-6.6 Commentary.

Comments can be made to recordings in progress or previous recordings; you will simultaneously hear both the recording and the comments when the recorded file is played back.

Set up commentary channels (refer to paragraph 2-6.6.1, Set Commentary Channels) before making commentary. Select **MIC** if commentary is from the front panel headphone jack or **LINE** if from a source connected to the rear panel.

Select channel number (**1**, **2**, **3**, or **4**) to make commentary to a file currently being recorded, select playback (**P**) to make commentary to an existing file.

Select a file and start playback (refer to paragraph 2-6.5.2, Start Playback of Previously Recorded File) to add commentary to a previously recorded file.

The following procedures describe how to:

- Set commentary channels
- Start commentary
- Stop commentary

NOTE

It can take a few seconds for commentary to be merged with its associated recording file. The message **NO FILE FOR COMMENTARY** appears in line one when playback is attempted before commentary merging is complete:

```
NO FILE FOR COMMENTARY
F#  CH OP DATE    START     STOP      LK
138/1 /2 /14SEP92/0927:27.9/0927:53.6/N
PLAYBACK CH:1 NUM:138
```

2-6.6.1 Set Commentary Channels.

a. Simultaneously press the **CODE** and **CHN** (**H**) keys to set up commentary channels. Line one shows **SET UP**, the cursor is positioned at the beginning of **RCV1** on line four:

```
SET UP      1IMS 2IMS 3IMS 4IMS
CH MODE GAPS THRESHOLD DELAY BRIDGE
1   M    S      00      0.5   5.0
RCV1  RCV2  RCV3  RCV4  COMM
```

b. Press the **TAB** key to move the cursor to **COMM** and press the **RETURN** key (refer to paragraph 2-6.4.1, Setup Receive Channels for information about **RCV1** through **RCV4**):

```
SET UP      1IMS 2IMS 3IMS 4IMS
CH MODE GAPS THRESHOLD DELAY BRIDGE
1   M    S       00       0.5   5.0
RCV1  RCV2  RCV3  RCV4  COMM
```

c. The cursor is positioned on the **P** in line three under **CH**. Press the **TAB** key to move the cursor between the values on line three under the **CH**, **THRESHOLD**, and **SOURCE** set up options:

```
SET UP      1IMS 2IMS 3IMS 4IMS
CH THRESHOLD SOURCE
P      00       LINE
RCV1  RCV2  RCV3  RCV4  COMM
```

The cursor will move to the right until the end of line and then return to the **P** in line three under **CH.**

Positioning the cursor under these set up options allows changing their values.

The following paragraphs describe how to set **CH** (channel), **THRESHOLD**, and **SOURCE** after selecting commentary channel.

2-6.6.1.1 CH (Channel).

a. Press the **TAB** key until the cursor is positioned on the **P** in line three under **CH** (CHannel):

```
SET UP      1IMS 2IMS 3IMS 4IMS
CH THRESHOLD SOURCE
P      00       LINE
RCV1  RCV2  RCV3  RCV4  COMM
```

b. Press the **UP ARROW** or the **DOWN ARROW** keys to select either **P** (Playback), **1** (Channel 1), **2** (Channel 2), **3** (Channel 3), or **4** (Channel 4). Selecting **P** permits adding commentary to a previously recorded file. Selecting **1**, **2**, **3**, or **4**, permits adding commentary to a file currently being recorded on that respective input channel.

If you don't change channel the RRSS automatically defaults to P.

Once the first or last (maximum or minimum) preset value has been reached, pressing the **UP ARROW** or the **DOWN ARROW** keys will have no effect and the RRSS will continue to display the current value. The RRSS automatically implements the preset value displayed.

2-6.6.1.2 THRESHOLD.

The threshold setting determines RRSS sensitivity to commentary input. The threshold value of 0 is based on a power level slightly above the RRSS thermal noise. If the threshold is set too low, periods of silence or noise from the microphone will be recorded, using disk space; if the threshold is set too high, portions of commentary may go unrecorded.

a. Press the **TAB** key until the cursor is positioned on the first **0** in line three under **THRESHOLD**:

```
SET UP      1IMS 2IMS 3IMS 4IMS
CH THRESHOLD SOURCE
P      00       LINE
RCV1   RCV2   RCV3   RCV4   COMM
```

b. Press the **UP ARROW** or the **DOWN ARROW** keys to select commentary activity threshold level: **0**, **3**, **6**, **9**, or **12** dB.

If you don't change the threshold, the RRSS automatically defaults to 0.

Once the first or last (maximum or minimum) preset value has been reached, pressing the **UP ARROW** or the **DOWN ARROW** keys will have no effect and the RRSS will continue to display the current value. The RRSS automatically implements the preset value displayed.

2-6.6.1.3 SOURCE.

Source selects the input port for the commentary signal. MIC (microphone) selects the front panel headphone jack. Line selects the rear panel audio jacks.

a. Press the **TAB** key until the cursor is positioned on **LINE** in line three under **SOURCE**:

```
SET UP      1IMS 2IMS 3IMS 4IMS
CH THRESHOLD SOURCE
P      00       LINE
RCV1   RCV2   RCV3   RCV4   COMM
```

b. Press the **UP ARROW** or the **DOWN ARROW** keys to select either **LINE** or **MIC** as the source of commentary for the specified channel (refer to paragraph 2-6.6.1.1, CH (CHannel)).

If you don't change source the RRSS automatically defaults to Line.

Once the first or last (maximum or minimum) preset value has been reached, pressing the **UP ARROW** or the **DOWN ARROW** keys will have no effect and the RRSS will continue to display the current value. The RRSS automatically implements the preset value displayed.

2-6.6.2 Start Commentary.

NOTE

If commentary is enabled (started) and start commentary is issued, commentary will be disabled (stopped). Commentary start and stop is a toggle function.

New commentary overwrites applicable portions of existing commentary.

Simultaneously press the **CODE** and **CMT** (**5**) keys to enable commentary. The **C** in line one indicates commentary is enabled; if a recording is in progress the channel number will also be displayed. In the example below **C3** indicates commentary is associated with current recording on channel **3**:

```
FILE  C3    1RAG 2IMS 3RAG 4IMG
F#  CH OP DATE     START      STOP       LK
333/3 /1 /28APR89/0602:09.8/0606:21.0/N
```

NOTE

Channel set up selections (refer to paragraph 2-6.6.1.1, CH (Channel)) effect the commentary indications in line one when commentary is enabled. If a specific channel is selected during channel set up the channel number will accompany the **C** in line one (e.g. **C3**). If **P** (playback) is selected during channel set up a **CP**, without the channel number, will appear in line one. Commentary can still be made to an in progress recording even though the channel set up is for **P** (playback), because playback is automatically invoked when recording is started. If commentary is attempted to an in progress recording for a channel not selected during channel set up, only a **C** will appear in line one (meaning commentary is enabled)but commentary will not be associated with the recording. Commentary is associated with a file only when **CP**, **C1**, **C2**, **C3**, or **C4** appears on line one.

When making commentary to an in progress recording there will be a lag between what you say in the microphone and what you hear in the headphones.

A **CP** in line one indicates commentary is associated with a previously recorded file being played back:

```
FILE  CP    1RAG 2IMS 3IMG 4IMG
F#  CH OP DATE     START      STOP       LK
333/3 /1 /28APR89/0602:09.8/0606:21.0/N
```

COMMENTARY

A **CT** in line one on ACP 2 indicates commentary was attempted with a file recorded from tape (refer to paragraph 2-6.9.3, Transfer from Tape):

```
FILE  CT   1RAG 2IMS 3IMG 4IMG  0604:00Z
F#  CH OP DATE    START     STOP      LK
333/3 /2 /28APR89/0602:09.8/0000:00.0/N
```

NOTE

If no channel number, **P**, or **T** appears, then there is no playback or record activity on the channel selected for commentary. If you enable commentary on an inactive channel, your comments will apply when recording or playback on that channel is started.

During commentary recording the following playback controls have no effect (refer to paragraph 2-6.5, Playback Recordings):

- pause
- resume
- speed (playback during commentary recording is always1.0 times the recorded speed)
- pitch

2-6.6.3 Stop Commentary.

NOTE

If commentary is not enabled (started) and stop commentary is issued, commentary will be enabled. Commentary start and stop is a toggle function.

Simultaneously press the **CODE** and **CMT** (**5**) keys to stop commentary. The status information in line one is updated to reflect commentary is disabled, for example, **CP** in line one indicates commentary during playback of a previously recorded file:

```
FILE  CP   1RAG 2IMS 3RAG 4IMG  0604:00Z
F#  CH OP DATE    START     STOP      LK
333/3 /1 /28APR89/0602:09.8/0606:21.0/N
```

The **CP** will disappear when commentary is disabled.

Commentary recording automatically stops when playback is stopped or the recording on the input channel being played back is stopped

2-6.7 Tabs.

Tabs can be inserted in a file as place markers to provide easy access to a portion of the file or to loop a file between two tabs. Playback of a file (refer to paragraph 2-6.5, Playback Recording) must be in progress before tabs can be inserted, deleted, or the file manipulated using tabs.

2-6.7.1 Insert Tab.

A maximum of 32 tabs can be inserted in a single file. A tab is inserted at the point in a file when the command is issued.

Simultaneously press the **CODE** and **STB** (**Q**) keys to insert a tab. The message **AUDIO TAB INSERTED** will briefly appear in line one:

```
AUDIO TAB INSERTED
F#  CH OP DATE    START      STOP       LK
142/1 /2 /14SEP92/0702:57.4/0000:00.0/N
```

2-6.7.2 Delete Tab.

Simultaneously press the **CODE** and **DTB** (**E**) keys to delete a tab. The message **AUDIO TAB DELETED** will briefly appear in line one and the tab prior to the current position in the file is deleted:

```
AUDIO TAB DELETED
F#  CH OP DATE    START      STOP       LK
142/1 /2 /14SEP92/0702:57.4/0000:00.0/N
```

If there are no tabs in the file the message **NO TAB FOUND** briefly appears in line one:

```
NO TAB FOUND
F#  CH OP DATE    START      STOP       LK
142/1 /2 /14SEP92/0702:57.4/0000:00.0/N
```

2-6.7.3 Tab Operations.

Tabs in a file can be used as place markers for easy access and repeated looping of a portion of a file during playback.

a. Simultaneously press the **CODE** and **TBO** (T) keys to perform tab operations. Line four will indicate **FWD** (forward), **BACK**, **LOOP**, and **STOP** and the cursor will be placed on **FWD**:

```
FILE        1IMS 2IMS 3IMS 4IMS  0704:15Z
F#  CH OP DATE     START      STOP       LK
142/1 /2 /14SEP92/0702:57.4/0000:00.0/N
FWD    BACK    LOOP    STOP
```

b. Press the **TAB** key to move the cursor between the **FWD**, **BACK**, **LOOP**, and **STOP**. The cursor will move to the right until the end of the line and then return to the beginning of the line.

2-6.7.3.1 FWD (Forward).

a. Press the **TAB** key until the cursor is positioned on **FWD** in line four:

```
FILE        1IMS 2IMS 3IMS 4IMS  0704:15Z
F#  CH OP DATE     START      STOP       LK
142/1 /2 /14SEP92/0702:57.4/0000:00.0/N
FWD    BACK    LOOP    STOP
```

b. Press the **RETURN** key to advance playback to the next tab position. Playback resumes from that point.

If no tab is found on a previously recorded file playback advances to the end of the file.

2-6.7.3.2 BACK.

a. Press the **TAB** key until the cursor is positioned on **BACK** in line four:

```
FILE        1IMS 2IMS 3IMS 4IMS  0704:15Z
F#  CH OP DATE     START      STOP       LK
142/1 /2 /14SEP92/0702:57.4/0000:00.0/N
FWD    BACK    LOOP    STOP
```

b. Press the **RETURN** key to go back to the first previous tab position. Playback resumes from that point.

If no tab is found on a previously recorded file playback jumps to the start of the file.

2-6.7.3.3 LOOP.

a. Press the **TAB** key until the cursor is positioned on **LOOP** in line four:

```
FILE        1IMS 2IMS 3IMS 4IMS  0704:15Z
F#  CH OP DATE     START      STOP       LK
142/1 /2 /14SEP92/0702:57.4/0000:00.0/N
FWD   BACK   LOOP   STOP
```

b. Press the **RETURN** key to repeatedly playback a portion of the file between two tabs. If there is only one tab in a file the loop will be between the tab and the beginning or the end of the file. If there are multiple tabs in a file, the loop will be between the two tabs prior to where you are in the file when the loop operation is started.

If you try to loop while playback is currently looping, the message **FILE ALREADY LOOPING** appears in line one:

```
FILE ALREADY LOOPING
F#  CH OP DATE     START      STOP       LK
142/1 /2 /14SEP92/0702:57.4/0000:00.0/N
FWD   BACK   LOOP   STOP
```

NOTE

It can take a few seconds for commentary to be merged with its associated recording file. The message **NO FILE FOR COMMENTARY** appears in line one when looping is attempted before commentary merging is complete:

```
NO FILE FOR COMMENTARY
F#  CH OP DATE     START      STOP       LK
138/1 /2 /14SEP92/0927:27.9/0927:53.6/N
PLAYBACK CH:1 NUM:138
```

2-6.7.3.4 STOP.

a. Press the **TAB** key until the cursor is positioned on **STOP** in line four:

```
FILE        1IMS 2IMS 3IMS 4IMS  0704:15Z
F#  CH OP DATE     START      STOP       LK
142/1 /2 /14SEP92/0702:57.4/0000:00.0/N
FWD   BACK   LOOP   STOP
```

b. Press the **RETURN** key to stop looping, normal playback resumes.

NOTE

If you try to stop looping when looping is not in progress the message **FILE NOT LOOPING** appears in line one:

```
FILE NOT LOOPING
F#  CH OP DATE    START      STOP       LK
142/1 /2 /14SEP92/0702:57.4/0000:00.0/N
FWD   BACK   LOOP   STOP
```

2-6.8 File Index Utilities.

File index utilities permit the operator to display and edit file labels, search for a file using different search attributes, and delete files.

2-6.8.1 Display File Label.

Information and features associated with a file can be displayed including:

- file number
- channel recorded from
- operator who initiated recording
- date recorded
- start time
- stop time, if applicable
- file protection
- frequency
- unit identification
- activity type
- modulation
- bandwidth
- case notation
- comments

a. Simultaneously press the **CODE** and **FLE** (**F**) keys; the display will show information about the latest file recorded or being recorded and will look similar to this:

```
FILE        1IMS 2RMS 3IMS 4IMS  0108:55Z
F#  CH OP DATE     START      STOP       LK
033/2 /1 /01JAN91/0107:55.8/0000:00.0/N
```

NOTE

Simultaneously pressing the **CODE** and **FLE** (**F**) keys will display the latest file chronologically placed on the disk, regardless of operator date and time settings. The **DOWN ARROW** and **UP ARROW** keys can be used to scroll through files, however the scrolling may not be sequential by file number; the file labels displayed may jump in a seemingly random fashion. This is because the **DOWN ARROW** and **UP ARROW** keys scroll through files in the search list, starting from the file most recently accessed in the list. Refer to paragraph 2-6.8.2, File Search, for a more complete description of search lists and how they work.

b. Press the **TAB** key to move the cursor between values on line three under the headings in line two. The cursor moves to the right and the ACP display scrolls until the end of line is reached, then the cursor returns to the first character in line three under **F#.** The first set of headings in line two, **F#**, **CH**, **OP**, **DATE**, **START**, and **STOP** provide information about the recording, refer to paragraph 2-6.4.2, Start Recording. The remaining set of headings, **LK**, **FREQ**, **ID**, **ACTY**, **MOD**, **BND**, **CASE**, and **COMMENT** permit you to look at, enter, or change specific data associated with the file (refer to paragraph 2-6.8.3, Complete/Edit File Label).

2-6.8.2 File Search.

You can find files based on information and file attributes shown in the file labels (refer to paragraph 2-6.8.1, Display File Label). When valid file label information is specified for a search, the RRSS creates a list of those files matching the search criteria, called a search list. You must first establish the search criteria to be used in the search. Search criteria is based upon certain fields (file attributes) within file labels. Search lists apply only to the operator who creates them, if operator 1 creates a search list it will not apply to operator 2 and visa-versa.

Search criteria can be specified as a single value or as a range of values, depending on the selected heading in line two. If you specify only the start value, the search criteria will be values greater than or equal to the start

value. If you specify only the end value, the search criteria will be values less than or equal to the end value. The search list is automatically updated as new files are created until the next search.

NOTE

File labels appear during many RRSS functions, search criteria can be established and a search list developed during any of these operations.

a. With a file label displayed, press the **TAB** key to move the cursor to the file attribute to be used to build the search list. File attributes that can be used in a search include:

- file number
- channel recorded from
- operator who initiated recording
- date recorded
- start time
- stop time, if applicable
- file protection
- frequency
- unit identification
- activity type
- modulation
- bandwidth
- case notation
- comments

b. After selecting a file attribute, simultaneously press the **CODE** and **SER** (**S**) keys. Line four indicates **SRCH LWR:** and **UPR:**, and the cursor placed on **SRCH LWR:**

```
FILE        1IMS 2IMS 3IMS 4IMS
F#  CH OP DATE     START      STOP       LK
142/1 /2 /18SEP92/0702:57.4/0800:00.0/N
SRCH LWR:   UPR:
```

c. Enter the lower limit of the required search.

d. Press the **TAB** key to select the upper limit of the search criteria.

e. Enter the upper limit of the required search.

f. Press the **RETURN** key to start the search and create a search list. Line four indicates **NUMBER OF MATCHING FILES**, there were **148** in the example below:

```
FILE        1IMS 2IMS 3IMS 4IMS
F#  CH OP DATE     START      STOP       LK
142/1 /2 /18SEP92/0702:57.4/0800:00.0/N
NUMBER OF MATCHING FILES:              148
```

g. The file label of the latest file found within the search list; file number **142** in the example below, will be displayed:

```
FILE        1IMS 2IMS 3IMS 4IMS
F#  CH OP DATE     START      STOP       LK
142/1 /2 /18SEP92/0702:57.4/0800:00.0/N
NUMBER OF MATCHING FILES:              148
```

NOTE

The latest file is the most recent file within the search list chronologically placed on disk, regardless of operator date and time settings or file number.

h. To illustrate a file search, suppose you wanted to search files by date.

(1) Simultaneously press the **CODE** and **FLE** (**F**) keys (or be in a function that displays the file labels):

```
FILE        1IMS 2IMS 3IMS 4IMS
F#  CH OP DATE     START      STOP       LK
142/1 /2 /18SEP92/0702:57.4/0800:00.0/N
```

(2) Press the **TAB** key to position the cursor on line three under the **DATE** heading in line two:

```
FILE        1IMS 2IMS 3IMS 4IMS
F#  CH OP DATE     START      STOP       LK
142/1 /2 /18SEP92/0702:57.4/0800:00.0/N
```

(3) Simultaneously press the **CODE** and **SER** (**S**) keys. The upper (**UPR:**) and lower (**LWR:**) default range of dates is shown:

```
FILE        1IMS 2IMS 3IMS 4IMS
F#  CH OP DATE     START      STOP       LK
142/1 /2 /18SEP92/0702:57.4/0800:00.0/N
SRCH LWR:01JAN00  UPR:31DEC99
```

(4) If you wanted to find files created on September 23rd, 1992, enter **23SEP92** in both upper and lower search criteria:

```
FILE        1IMS 2IMS 3IMS 4IMS
F#  CH OP DATE     START      STOP       LK
142/1 /2 /18SEP92/0702:57.4/0800:00.0/N
SRCH LWR:23SEP92  UPR:23SEP92
```

(5) If you make a mistake use the **RIGHT ARROW** and **LEFT ARROW** keys to position the cursor and reenter the data (refer to paragraph 2-6.2.1, Next or Previous Character). Use the **BACK SP** key to delete data (refer to paragraph 2-6.2.6, Delete Data). Press the **RETURN** key after search criteria is entered. In the example below there were **17** files created on September 23rd, 1992, and file number **138** is the latest file within the search list:

```
FILE        1IMS 2IMS 3IMS 4IMS
F#  CH OP DATE     START      STOP       LK
138/1 /2 /23SEP92/0922:57.4/1000:55.0/N
NUMBER OF MATCHING FILES:              17
```

NOTE

The latest file is the most recent file within the search list chronologically placed on disk, regardless of operator date and time settings or file number.

f. The RRSS automatically creates a default search list of all of the files on the disk at power-up or restart. The default search list is in the chronological order of when files were placed on disk, regardless of operator date and time settings or file number. In some functions the **DOWN ARROW** or the **UP ARROW** permits scrolling through the search list, starting from the file most recently accessed within the list; the scrolling may not be sequential because some files may have been deleted. However, once a new search list has been created the **DOWN ARROW** or the **UP ARROW** keys will scroll through the new search list, starting from the most recently accessed file within the new list. For example, suppose the disk contains file numbers 1 through 14, with file number 14 being the most recently placed on disk.

(1) Simultaneously pressing the **CODE** and **FLE** (**F**) keys displays the latest file placed on the disk:, **F# 14**:

```
FILE        1IMS 2IMS 3IMS 4IMS
F#  CH OP DATE     START      STOP       LK
014/1 /2 /18SEP92/0702:57.4/0800:00.0/N
```

(2) Pressing the **DOWN ARROW** key will scroll down from file number 14 to file number **13** and its file label will be displayed:

```
FILE        1IMS 2IMS 3IMS 4IMS
F#  CH OP DATE     START      STOP       LK
013/1 /2 /18SEP92/0702:57.4/0800:00.0/N
```

(3) Simultaneously pressing the **CODE** and **FLE** (**F**) keys at this point displays the latest file placed on disk, **F# 14**:

```
FILE        1IMS 2IMS 3IMS 4IMS
F#  CH OP DATE     START      STOP       LK
014/1 /2 /18SEP92/0702:57.4/0800:00.0/N
```

(4) However, pressing the **DOWN ARROW** key again scrolls down, not from file number 14, but from the last file accessed within the search list, in this case file number 13, so file number 12 and its file label will be displayed:

```
FILE        1IMS 2IMS 3IMS 4IMS
F#  CH OP DATE     START      STOP       LK
012/1 /2 /18SEP92/0702:57.4/0800:00.0/N
```

Use of the **DOWN ARROW** key causes the displayed file labels to jump from file number 14 to file number 12. This is because the **DOWN ARROW** and **UP ARROW** keys scroll from the last file accessed within the search list, not from the last file chronologically placed on disk.

(5) Suppose a new search list has been created that includes file numbers 5 through 8. Pressing **CODE** and **FLE** (**F**) keys displays the latest file placed on disk, **F# 14**:

```
FILE        1IMS 2IMS 3IMS 4IMS
F#  CH OP DATE     START      STOP       LK
014/1 /2 /18SEP92/0702:57.4/0800:00.0/N
```

(6) Pressing the **DOWN ARROW** key displays the next to latest file within the new search list, in this case, file number **7**, and its file label is displayed:

```
FILE        1IMS 2IMS 3IMS 4IMS
F#  CH OP DATE     START      STOP       LK
007/1 /2 /18SEP92/0702:57.4/0800:00.0/N
```

(7) Suppose the **DOWN ARROW** key is continually pressed until the end of the new search list is reached (the earliest file meeting the search criteria). In this case the end of the search list is file number **5**, and its file label is displayed:

```
FILE        1IMS 2IMS 3IMS 4IMS
F#  CH OP DATE     START      STOP       LK
005/1 /2 /18SEP92/0702:57.4/0800:00.0/N
```

(8) Simultaneously pressing the **CODE** and **FLE** (**F**) keys at this point again displays the latest file placed on disk, **F# 14**:

```
FILE        1IMS 2IMS 3IMS 4IMS
F#  CH OP DATE     START      STOP       LK
014/1 /2 /18SEP92/0702:57.4/0800:00.0/N
```

(9) However, pressing the **DOWN ARROW** key again scrolls down, not from file number 14, but from the last file accessed within the new search list, in this case file number 5, so file number **5** and its file label are displayed (you can't scroll past the end of the search list and there is no automatic wrap to the beginning):

```
FILE        1IMS 2IMS 3IMS 4IMS
F#  CH OP DATE     START      STOP       LK
005/1 /2 /18SEP92/0702:57.4/0800:00.0/N
```

NOTE

If new files are created that match the current search criteria, they will automatically be added to the search list.

2-6.8.3 Complete/Edit File Label.

Information and features associated with a file can be entered/edited in the file's label including:

- lock file to prevent deletion
- frequency
- unit identification
- activity type
- modulation
- bandwidth
- case notation
- comments

a. When a recording is started or a file's label displayed, the cursor is positioned on line three under the **LK** and the display looks similar to this:

```
FILE        1IMS 2RMS 3IMS 4IMS  0108:55Z
F#  CH OP DATE     START      STOP       LK
033/2 /1 /01JAN91/0107:55.8/0000:00.0/N
```

b. Press the **TAB** key to move the cursor between values on line three under the headings in line two. The cursor moves to the right and the ACP display scrolls until the end of line is reached, then the cursor returns to the first character in line three under **F#.** The first set of headings in line two, **F#**, **CH**, **OP**, **DATE**, **START**, and **STOP**, provide information about the recording (refer to paragraph 2-6.4.2, Start Recording). The remaining headings, **LK**, **FREQ**, **ID**, **ACTY**, **MOD**, **BND**, **CASE**, and **COMMENT**, permit you to enter specific data associated with the file and are described in the following paragraphs.

2-6.8.3.1 LK (Lock).

a. Press the **TAB** key until the cursor is positioned on the **N** in line three under **LK**:

```
FILE        1IMS 2RMS 3IMS 4IMS  0108:55Z
F#  CH OP DATE     START      STOP       LK
033/2 /1 /01JAN91/0107:55.8/0000:00.0/N
```

NOTE

Locking a file will not protect it when the **DISK ERASE** switch is flipped (refer to paragraph 2-9, Emergency Procedures).

b. Press the **Y** key to lock the file, press the **N** key to unlock the file. Locking a file prevents it from being deleted, either manually (refer to paragraph 2-6.8.5, Delete A File) or automatically when the disk is 95% full (refer to paragraph 2-6.11, Disk Full Indicator).

If you don't change lock the RRSS automatically defaults to N.

c. Press the **RETURN** key to enter data.

2-6.8.3.2 FREQ (Frequency).

a. Press the **TAB** key until the cursor is positioned on line three under **FREQ**:

```
FILE        1IMS 2RMS 3IMS 4IMS  0108:55Z
F#  E     START      STOP       LK FREQ
033/AN91/0107:55.8/0000:00.0/N/
```

b. Enter the frequency in accordance with mission directions or operations, up to eight characters. If you make a mistake use the **RIGHT ARROW** and **LEFT ARROW** keys to position the cursor and reenter the data (refer to paragraph 2-6.2.1, Next or Previous Character). Use the **BACK SP** key to delete data (refer to paragraph 2-6.2.6, Delete Data). If you do not enter a frequency the RRSS will leave the field blank.

c. Press the **RETURN** key to enter data.

2-6.8.3.3 ID (Identification).

a. Press the **TAB** key until the cursor is positioned on line three under **ID**:

```
FILE        1IMS 2RMS 3IMS 4IMS  0108:55Z
F#     STOP       LK FREQ      ID
033/1/0000:00.0/N/           /
```

b. Enter your unit identification in accordance with mission directions or operations, up to 12 characters. If you make a mistake use the **RIGHT ARROW** and **LEFT ARROW** keys to position the cursor and reenter the data (refer to paragraph 2-6.2.1, Next or Previous Character). Use the **BACK SP** key to delete data (refer to paragraph 2-6.2.6, Delete Data). If you do not enter a unit identification the RRSS will leave the field blank.

c. Press the **RETURN** key to enter data.

2-6.8.3.4 ACTY (Activity).

a. Press the **TAB** key until the cursor is positioned on line three under **ACTY**:

```
FILE        1IMS 2RMS 3IMS 4IMS  0108:55Z
F#        LK FREQ      ID            ACTY
033/00.0/N/           /             /
```

b. Enter activity type in accordance with mission directions or operations, up to 6 characters. If you make a mistake use the **RIGHT ARROW** and **LEFT ARROW** keys to position the cursor and reenter the data (refer to paragraph 2-6.2.1, Next or Previous Character). Use the **BACK SP** key to delete data (refer to paragraph 2-6.2.6, Delete Data). If you do not enter an activity type the RRSS will leave the field blank.

c. Press the **RETURN** key to enter data.

2-6.8.3.5 MOD (Modulation).

a. Press the **TAB** key until the cursor is positioned on line three under **MOD**:

```
FILE        1IMS 2RMS 3IMS 4IMS  0108:55Z
F#  REQ      ID            ACTY   MOD
033/        /             /      /
```

b. Enter modulation type of the input signal you are recording in accordance with mission directions or operations, up to eight characters. If you make a mistake use the **RIGHT ARROW** and **LEFT ARROW** keys to position the cursor and reenter the data (refer to paragraph 2-6.2.1, Next or Previous Character). Use the **BACK SP** key to delete data (refer to paragraph 2-6.2.6, Delete Data). If you do not enter a modulation type the RRSS will leave the field blank.

c. Press the **RETURN** key to enter data.

2-6.8.3.6 BND (Band).

a. Press the **TAB** key until the cursor is positioned on line three under **BND**:

```
FILE        1IMS 2RMS 3IMS 4IMS  0108:55Z
F#  D            ACTY   MOD      BND
033/             /      /        /
```

b. Enter bandwidth of the input signal you are recording in accordance with mission directions or operations, up to eight characters. If you make a mistake use the **RIGHT ARROW** and **LEFT ARROW** keys to position the cursor and reenter the data (refer to paragraph 2-6.2.1, Next or Previous Character). Use the **BACK SP** key to delete data (refer to paragraph 2-6.2.6, Delete Data). If you do not enter a bandwidth the RRSS will leave the field blank.

c. Press the **RETURN** key to enter data.

2-6.8.3.7 CASE.

a. Press the **TAB** key until the cursor is positioned on line three under **CASE**:

```
FILE        1IMS 2RMS 3IMS 4IMS  0108:55Z
F#  OD       BND      CASE
033/        /        /
```

b. Enter case notation in accordance with mission directions or operations, up to 19 characters. If you make a mistake use the **RIGHT ARROW** and **LEFT ARROW** keys to position the cursor and reenter the data (refer to paragraph 2-6.2.1, Next or Previous Character). Use the **BACK SP** key to delete data (refer to paragraph 2-6.2.6, Delete Data). If you do not enter case notation the RRSS will leave the field blank.

c. Press the **RETURN** key to enter data.

2-6.8.3.8 COMMENT.

a. Press the **TAB** key until the cursor is positioned on line three under **COMMENT**:

```
FILE        1IMS 2RMS 3IMS 4IMS   0108:55Z
F#  COMMENT
033/
```

b. Enter any comments you might want to make regarding this recording or file, up to 114 characters. If you make a mistake use the **RIGHT ARROW** and **LEFT ARROW** keys to position the cursor and reenter the data (refer to paragraph 2-6.2.1, Next or Previous Character). Use the **BACK SP** key to delete data (refer to paragraph 2-6.2.6, Delete Data). If you do not enter any comments the RRSS will leave the field blank.

c. Press the **RETURN** key to enter data.

2-6.8.4 Delete a File.

a. Display the file label of the file to be deleted. File labels are displayed during many RRSS functions, or you can invoke a particular file's label to be displayed (refer to paragraphs 2-6.8.1, Display File Label and 2-6.8.2, File Search).

b. Simultaneously press the **CODE** and **DEL** (**X**) keys. The message **DELETE FILE NO/YES?** appears in line four:

```
FILE        1IMS 2RMS 3IMS 4IMS
F#  CH OP DATE     START      STOP       LK
033/2 /1 /01JAN91/0107:55.8/0200:00.0/N
DELETE FILE NO/YES?
```

NOTE

Pressing the **RETURN** key, after selecting **YES**, confirms the request to delete a file and any associated commentary. Deleted files CAN NOT be retrieved. Do not delete a file unless you are sure it is not needed.

c. Press the **TAB** key to select either **NO** or **YES** and then press the **RETURN** key. If **NO** is selected the display returns to the file label of the selected file. If **YES** is selected the file is deleted and the display shows the next most recent file.

d. If the file to be deleted is locked (refer to paragraph 2-6.8.3, Complete/Edit File Labels) the message **LOCKED FILE** appears in line one:

```
LOCKED FILE
F#  CH OP DATE    START      STOP       LK
033/2 /1 /01JAN91/0107:55.8/0200:00.0/Y
```

NOTE

A locked file must be unlocked before it can be deleted.

2-6.9 Disk/Tape File Transfer.

Individual files or the entire contents of the disk can be transferred between the RRSS disk and a tape recorder for archival purposes.

NOTE

It is recommended that transfers between the RRSS disk and a tape recorder be performed only from the operator 2 position. This is because operator 2's playback settings effect the output, regardless of which operator starts the transfer. Additionally, disk/tape transfer alerts and display indications do not appear on operator 1's display.

Operator 2 will not be able to playback a file while disk/tape transfers are being performed or add commentary when recording a file from tape.

2-6.9.1 Start File Transfer to Tape.

Current or previous recordings, including commentary, can be transferred to a tape recorder via the TAPE connector on the front panel. Transfers to tape must be done by an ACP, it cannot be done by a host controller.

a. Connect a tape recorder to the RRSS front panel **TAPE** connector (refer to paragraph 2-4, Assembly and Preparation for Use).

NOTE

If tape transfer is in progress and start tape transfer is issued, tape transfer will stop.

b. Simultaneously press the **CODE** and **P→T** (**6**) keys to start a transfer. Line four indicates **TRANSFER FILE**, **CH:1** and **NUM:XXX**, where the value in NUM:XXX is the file currently displayed in line 3.

```
FILE        1IMS 2IMS 3IMS 4IMS
F#  CH OP DATE     START      STOP       LK
142/1 /2 /14SEP92/0702:57.4/0731:16.0/N
TRANSFER FILE       CH:1  NUM:142
```

c. Press the **TAB** key to move the cursor and select either channel (**CH:**) or file number (**NUM:**) options on line four.

NOTE

All transfers to tape are accomplished via operator 2 (**OPER 2**) output channel circuitry. If operator 1 (OPER 1) or the host controller sends a file to tape the operator 2 settings at the time will apply to the output file. For example, if operator 2 has set the volume low (refer to paragraph 2-6.5.3, Adjust Playback Volume) the output level of the file transferred to tape will also be low. Also, operator 2 will not be able to playback a file while files are transferring to tape.

The following paragraphs describe how to transfer in progress recordings and previously recorded files to tape after file transfer has been selected.

2-6.9.1.1 Transfer In-Progress Recording to Tape.

a. To transfer an in progress recording (refer to paragraph 2-6.4.2, Start Recording) you must first select which channel currently being recorded you want to transfer. Press the **TAB** key to move the cursor to the **CH:** option, then press the **1**, **2**, **3**, or **4**, keys to select the channel. In the example below, channel 2 was selected:

```
FILE        1MS 2RMS 3IMS 4IMS
F#  CH OP DATE    START      STOP       LK
142/2 /2 /14SEP92/0702:57.4/0731:16.0/N
TRANSFER FILE      CH:2  NUM:142
```

b. Press the **RETURN** key to start the transfer. A **T** will appear in front of the playback time in line one on ACP 2 to indicate transfer to the **TAPE** output connector is taking place:

```
FILE        1IMS 2RMS 3IMS 4IMS T0703:01Z
F#  CH OP DATE    START      STOP       LK
142/2 /2 /14SEP92/0702:57.4/0731:16.0/N
TRANSFER FILE      CH:2  NUM:142
```

(1) If you select a channel not currently recording the message **CHANNEL NOT RECORDING** appears in line one:

```
CHANNEL NOT RECORDING
F#  CH OP DATE    START      STOP       LK
   /  /  /       /    :  . /    :  . /
```

Reinitiate tape transfer (refer to paragraph 2-6.8.1, step b, Transfer to Tape).

(2) Since there are only four input channels, if you select channel 5 or above, the message **INVALID PARAMETER** appears in line one:

```
INVALID PARAMETER
F#  CH OP DATE    START      STOP       LK
   /  /  /       /    :  . /    :  . /
```

Reinitiate tape transfer (refer to paragraph 2-6.8.1, step b, Transfer to Tape).

2-6.9.1.2 Transfer Previously Recorded File to Tape.

a. To transfer a previously recorded file you must first select which file you want to transfer. Press the **TAB** key to move the cursor to the **NUM:** option. Place the cursor on the first position of the file number (**NUM**) and enter the file number of the file to be transferred:

```
FILE        1IMS 2IMS 3IMS 4IMS
F#  CH OP DATE     START      STOP       LK
138/1 /2 /14SEP92/0927:27.9/0927:53.6/N
TRANSFER FILE       CH:1 NUM:138
```

b. If you make a mistake use the **RIGHT ARROW** and **LEFT ARROW** keys to position the cursor and reenter the data (refer to paragraph 2-6.2.1, Next or Previous Character). Use the **BACK SP** key to delete data (refer to paragraph 2-6.2.6, Delete Data). If you do not enter a file number the RRSS automatically places the file number currently displayed on line 3 (number **138** in the example above).

c. Press the **RETURN** key after entering the file number. A **T** will appear in front of the playback time in line one on ACP 2 to indicate transfer to the **TAPE** output connector is taking place:

```
FILE        1IMS 2IMS 3IMS 4IMS T0703:01Z
F#  CH OP DATE     START      STOP       LK
142/1 /2 /14SEP92/0702:57.4/0731:16.0/N
```

(1) If the file number does not correspond to any previously recorded file the message **FILE NOT FOUND** appears on line one:

```
FILE NOT FOUND
F#  CH OP DATE     START      STOP       LK
   /  /  /       /    :  . /    :  . /
```

Reinitialize tape transfer (refer to paragraph 2-6.8.1, step b, Transfer to Tape).

(2) If you select a file number 000 or do not enter a valid 3 digit number, the message **INVALID PARAMETER** appears in line one:

```
INVALID PARAMETER
F#  CH OP DATE     START      STOP       LK
   /  /  /       /    :  . /    :  . /
```

Reinitialize tape transfer (refer to paragraph 2-6.8.1, step b, Transfer to Tape).

2-6.9.2 Stop File Transfer to Tape.

NOTE

If tape transfer is not in progress and stop tape transfer is issued, tape transfer will stop.

a. Simultaneously press the **CODE** and **P→T** (**6**) keys to stop transfer. The time information in line one is updated to reflect transfer has stopped. For example, during a transfer the time in line one indicates a transfer to tape is taking place:

```
FILE        1IMS 2RMS 3IMS 4IMS T0703:01Z
F#  CH OP DATE     START      STOP       LK
142/2 /2 /14SEP92/0702:57.4/0731:16.0/N
TRANSFER FILE       CH:2  NUM:142
```

NOTE

Playback can also be stopped by operator 2 (refer to paragraph 2-6.4.7, Stop Playback) to stop transfer to tape.

b. The time will disappear when the transfer to tape is stopped:

```
FILE        1IMS 2RMS 3IMS 4IMS
F#  CH OP DATE     START      STOP       LK
142/2 /2 /14SEP92/0702:57.4/0731:16.0/N
```

2-6.9.3 Start Transfer from Tape.

Off-line files can be transferred from a tape player to the RRSS via the **TAPE** connector on the front panel. Transfers from tape must be done by an ACP, it cannot be done by a host controller.

NOTE

If tape transfer is in progress and start tape transfer is issued, tape transfer will stop.

Neither operator can make commentary to the file currently being recorded from tape. If attempted by operator 2, a **CT** will appear in line 1 of the display but commentary will not be recorded.

Simultaneously press the **CODE** and **R←T** (**7**) keys to start a transfer. The **T**s in lines one and three indicate recorded file is from tape, the **0000:00** in line three under **STOP** indicates the recording is in progress:

```
FILE      T 1IMS 2IMS 3IMS 4IMS
F#  CH OP DATE     START      STOP       LK
333/T /2 /01JAN92/0602:09.8/0000:00.0/N
```

2-6.9.4 Stop Transfer from Tape.

NOTE

If tape transfer is not in progress and stop tape transfer is issued, tape transfer will start.

Multiple files transferred from tape in a single operation will be consolidated into one file on the tape. Also, you will not be able to manipulate commentary on a file brought back to disk from tape (refer to paragraph 2-6.6, Commentary).

a. Simultaneously press the **CODE** and **R←T** (**7**) keys to stop a transfer. The T in line one disappears to indicate recording has stopped; the T in line three indicates the file (number 333 in the example below) was recorded from tape:

```
FILE       1IMS 2IMS 3IMS 4IMS
F#  CH OP DATE    START     STOP      LK
333/T /2 /01JAN92/0602:09.8/0605:22.0/N
```

b. The displayed stop time is not automatically updated to reflect recording has stopped. In the example below, the recording of file number 333 stopped as indicated by the **T** in line one not being displayed, however the stop time still indicates **0000:00.0**:

```
FILE       1IMS 2IMS 3IMS 4IMS  0919:59Z
F#  CH OP DATE    START     STOP      LK
333/T /2 /14SEP92/0927:27.9/0000:00.0/N
```

The stop time will be updated the next time the file label is displayed. Simultaneously pressing the **CODE** and **FLE** (**F**) keys will redisplay the file label:

```
FILE       1IMS 2IMS 3IMS 4IMS  0919:59Z
F#  CH OP DATE    START     STOP      LK
138/1 /2 /14SEP92/0927:27.9/0927:53.6/N
```

2-6.9.5 Transfer Entire Disk to Tape.

The entire disk can be transferred to tape (dumped), refer to paragraph 2-6.10.2, Dump Files to Tape.

2-6.10 Disk Utilities.

Disk utilities permit the following:

- checking disk space
- dump contents of disk to tape
- delete all unlocked files
- format disk

2-6.10.1 Check Disk Space.

Disk space used and remaining recording time can be displayed. Simultaneously press the **CODE** and **DSK** (**K**) keys. Line two indicates percentage of the disk presently used (**DISK UTILIZATION**) and line three indicates how much time is left on the disk for recordings (**RECORDING TIME REMAINING**). In the example below **75%** of the disk is used and there is one hour and 30 minutes (**1:30**) of recording time left:

```
DISK        1RAG 2IMS 3RAG 4IMG
        75% DISK UTILIZATION
    1:30 RECORDING TIME REMAINING
DUMP    DELETE   FORMAT
```

NOTE

Disk utilization is based on the greater of two factors; 1) the percent of message numbers used compared to the total available (999) or 2) the percent of remaining recording time available compared to the amount when the disk was formatted (approximately 8 hours and 30 minutes).

The cursor is placed in line four on **DUMP.** Press the **TAB** key to select **DUMP**, **DELETE**, or **FORMAT**, described below.

2-6.10.2 Dump Files to External Tape.

NOTE

It is recommended that transfers between the RRSS disk and a tape recorder be performed only from the operator 2 position. This is because operator 2's playback settings effect the output, regardless of which operator starts the transfer. Additionally, disk/tape transfer alerts and display indications do not appear on operator 1's display.

Operator 2 will not be able to make commentary or playback a file while disk/tape transfers are being performed.

a. Connect a tape recorder to the RRSS front panel **TAPE** connector (refer to paragraph 2-4, Assembly and Preparation for Use).

b. Simultaneously press the **CODE** and **DSK** (**K**) keys.

```
DISK        1RAG 2IMS 3RAG 4IMG
        75% DISK UTILIZATION
    1:30 RECORDING TIME REMAINING
DUMP    DELETE   FORMAT
```

c. Press the **TAB** key to select **DUMP** and press the **RETURN** key. **DUMP** transfers the entire disk to **TAPE** connector. All of the files on the disk are transferred as one file to the tape recorder. The recording time of the file currently being transferred is displayed in the time status area; the **T** indicates tape:

```
FILE       1IMS 2RMS 3IMS 4IMS T0756:23Z
F#  CH OP DATE    START     STOP      LK
033/2 /1 /01JAN91/0107:55.8/0200:00.0/N
```

c. If DUMP is attempted while playback is in progress by operator 2, the message **PLAYBACK ALREADY IN PROGRESS** appears in line one:

```
PLAYBACK ALREADY IN PROGRESS
F#  CH OP DATE    START     STOP      LK
033/2 /1 /01JAN91/0107:55.8/0200:00.0/N
```

Stop playback (refer to paragraph 2-6.5.8, Stop Playback) before attempting to transfer disk to tape.

2-6.10.3 Delete Unlocked Files.

All unprotected files (refer to paragraph 2-6.8.4, Lock and Unlock Files) within the current search list (refer to paragraph 2-6.8.2, File Search) can be deleted.

a. Simultaneously press the **CODE** and **DSK** (**K**) keys:

```
DISK       1RAG 2IMS 3RAG 4IMG
       75% DISK UTILIZATION
   1:30 RECORDING TIME REMAINING
DUMP   DELETE  FORMAT
```

b. Press the **TAB** key to select **DELETE** and press the **RETURN** key. The message **DELETE ALL NO/YES?** appears in line four, the cursor is placed on **NO:**

```
DISK       1RAG 2IMS 3RAG 4IMG
       75% DISK UTILIZATION
   1:30 RECORDING TIME REMAINING
DELETE  ALL NO/YES?
```

c. Press the **TAB** key to select either **NO** or **YES** and then press the **RETURN** key. If **NO** is selected the display returns to file label of latest file. If **YES** is selected all unlocked files on the disk begin to be deleted and the message **FILE** briefly appears in line one:

```
FILE        1RAG 2IMS 3RAG 4IMG
       75% DISK UTILIZATION
   1:30 RECORDING TIME REMAINING
DELETE  ALL NO/YES?
```

NOTE

Only the unlocked files in the current search list are deleted. If the default (not operator specified) search list (all files) is currently applicable all unlocked files on the disk are deleted (refer to paragraph 2-6.8.2, File Search). Files currently in use are not deleted.

If the RRSS is not turned off, new files created after the unlocked files have been deleted will get the next file number available assigned to them. However, if the RRSS is turned off and then ON again, new files will be assigned the lowest file number available. For example, suppose you have 20 files on the disk and delete all of them, then make a recording and create a new file. The new file will be number 21, the next available file number. However, if you have 20 files on the disk and delete all of them, turn the RRSS off and then ON again, then make a recording and create a new file the new file will be number 1, the lowest file number available.

2-6.10.4 Format Disk.

The disk can be reformatted, which eliminates all files on the disk and prepares the disk for initial use in the RRSS.

NOTE

An unformatted disk will automatically be formatted when the RRSS is turned on (refer to paragraph 2-6.2, Power-Up).

a. Simultaneously press the **CODE** and **DSK** (**K**) keys:

```
DISK        1RAG 2IMS 3RAG 4IMG
       75% DISK UTILIZATION
   1:30 RECORDING TIME REMAINING
DUMP   DELETE  FORMAT
```

b. Press the **TAB** key to select **FORMAT** and press the **RETURN** key. The message **FORMAT DISK NO/YES?** appears in line four:

```
DISK        1IMS 2IMS 3IMS 4IMG
       75% DISK UTILIZATION
   1:30 RECORDING TIME REMAINING
FORMAT DISK NO/YES?
```

c. Press the **TAB** key to select either **NO** or **YES** and then press the **RETURN** key. If **NO** is selected the display returns to the disk utilization display. If **YES** is selected disk reformatting begins and line one indicates **FORMATTING OF DISK IN PROGRESS**:

```
FORMATTING OF DISK IN PROGRESS
         % DISK UTILIZATION
    :   RECORDING TIME REMAINING
DUMP   DELETE  FORMAT
```

d. It may take up to 20 minutes to reformat a disk. When formatting is complete the display will look similar to this:

```
DISK       1IMS 2IMS 3IMS 4IMS
      000% DISK UTILIZATION
   8:28 RECORDING TIME REMAINING
DUMP   DELETE  FORMAT
```

NOTE

Reformatting a disk does not declassify it. Only a complete disk erasure using the **DISK ERASE** switch will declassify a disk (refer to paragraph 2-9, Emergency Procedures).

2-6.11 DISK FULL Indicator.

The **DISK FULL** indicator (1) flashes when the disk is 80% full, and the ACP briefly indicates **80% DISK CAPACITY**:

65122

```
80% DISK CAPACITY
```

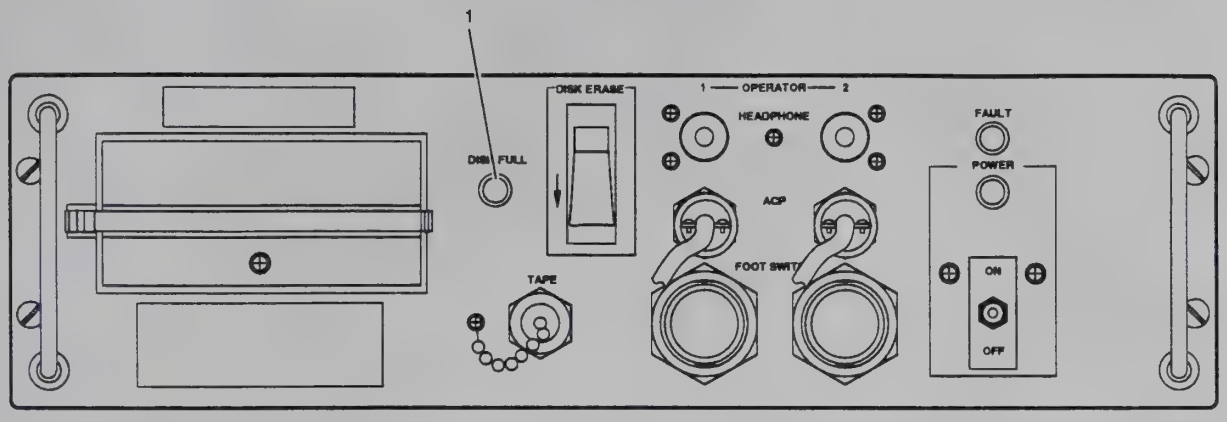
1
DISK ERASE
DISK FULL
1 — OPERATOR — 2
HEADPHONE
FAULT
POWER
ACP
FOOT SWITCH
TAPE
ON
OFF

65122A

The **DISK FULL** indicator (1) comes on steady when the disk is 90% full and the ACP briefly indicates **90% DISK CAPACITY**:

```
90% DISK CAPACITY
```

Disk space can be monitored at any time (refer to paragraph 2-6.10.1, Check Disk Space) and unnecessary files deleted (refer to paragraph 2-6.8.5, Delete a File) to recover disk space. When disk space reaches 95% full the RRSS automatically begins deleting unprotected files (refer to paragraph 2-6.8.4, Lock and Unlock Files) until the disk utilization is reduced below 80%. If the 95% full deletion process fails, record will not work (refer to paragraph 2-9.2, 95% Fail).

NOTE

Files are deleted in chronological order, the first file deleted being the oldest file chronologically placed on disk, regardless of operator date and time settings.

SHUT DOWN

2-6.12 Shut down.

a. Stop all RRSS operations (record, playback, etc.).

b. Set the **ON/OFF** circuit breaker (1) to **OFF**, the **POWER** indicator (2) will go out.

65121

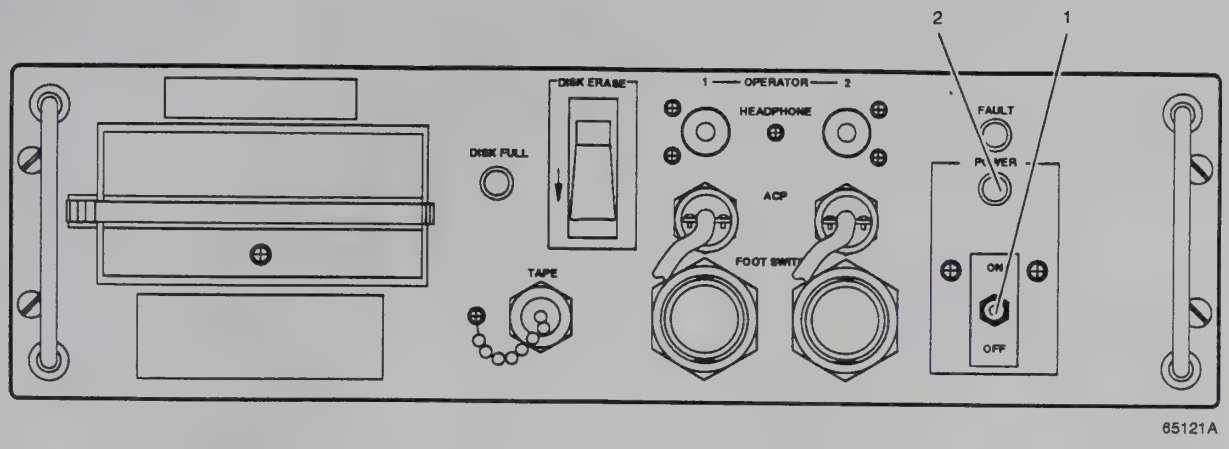
2
1
DISK ERASE
1 — OPERATOR — 2
HEADPHONE
FAULT
DISK FULL
ACP
TAPE
FOOT SWITCH
ON
OFF

65121A

2-7 DECALS AND INSTRUCTION PLATES.

Decals applicable to the operation of the RRSS are shown below.

65119

2-8 PREPARATION FOR MOVEMENT.

a. Make sure RMA (3) is secure in recorder (4) and locking handle (5) is latched and engages fork (6).

b. If applicable, secure classified RMA in accordance with mission directives.

65120

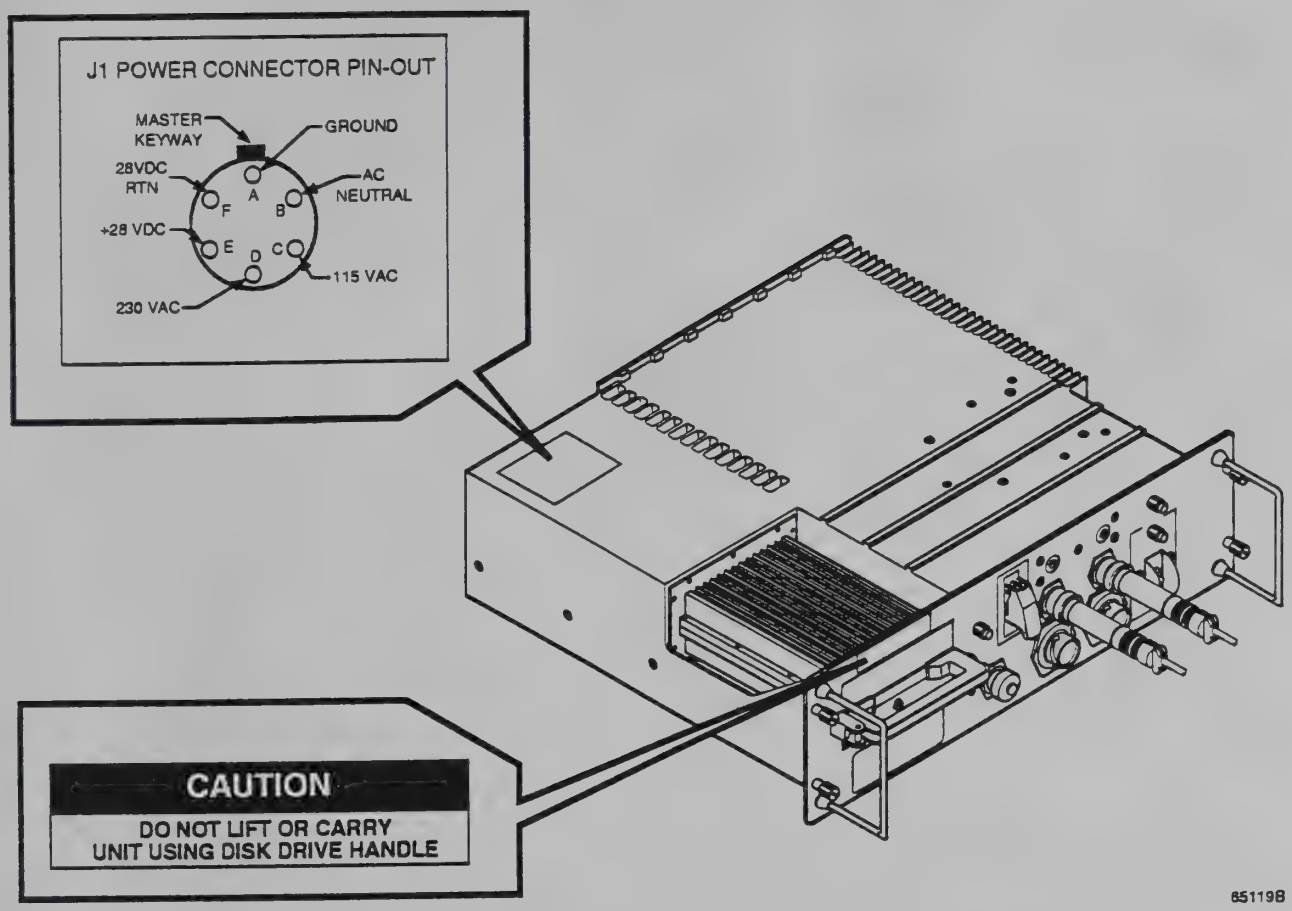
J1 POWER CONNECTOR PIN-OUT
MASTER KEYWAY
GROUND
28VDC RTN
AC NEUTRAL
+28 VDC
115 VAC
230 VAC
A
B
C
D
E
F
CAUTION
DO NOT LIFT OR CARRY UNIT USING DISK DRIVE HANDLE
851198

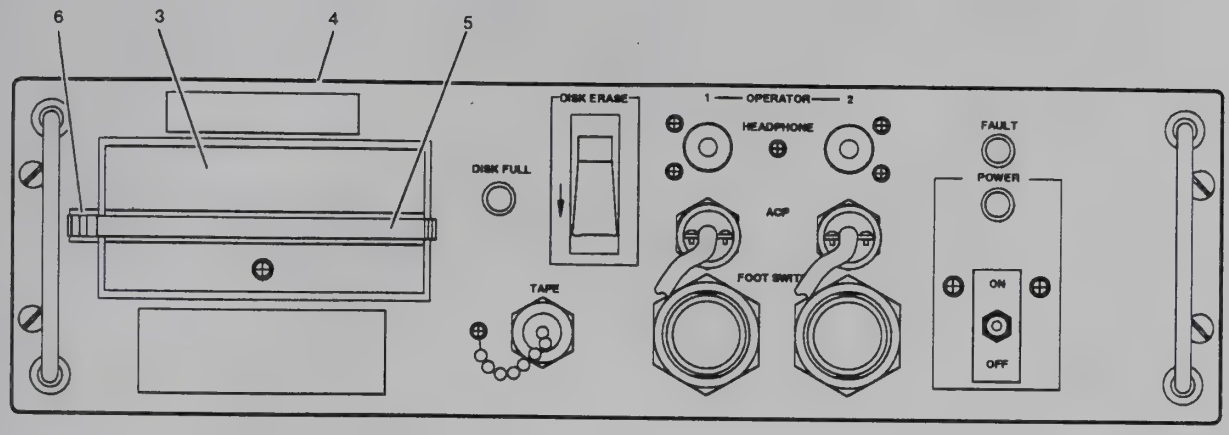
6
3
4
5
DISK ERASE
1 — OPERATOR — 2
HEADPHONE
FAULT
POWER
DISK FULL
ACP
FOOT SWTCH
TAPE
ON
OFF

65120A

SECTION IV. OPERATION UNDER UNUSUAL CONDITIONS

2-9 EMERGENCY PROCEDURES.

2-9.1 Disk Erase.

In an emergency the RRSS disk can be zeroized to prevent compromise of classified data.

NOTE

This procedure takes approximately 25 minutes, but may take up to 60 minutes. If quicker destruction is required, physically destroy the RMA using a hammer or ax.

If disk erase is interrupted after about 15 seconds the RRSS will not recognize the disk as formatted and will reformat the disk the next time it is inserted (refer to paragraph 2-6.2, Power-Up). Reformatting a disk does not declassify it. Only a complete disk erasure using the **DISK ERASE** switch (1) will declassify a disk.

a. Raise protective cover (2) over **DISK ERASE** switch (1) and momentarily flip the **DISK ERASE** switch to the down position. The message **DISK ZEROIZE IN PROGRESS** appears on line one:

```
DISK ZEROIZE IN PROGRESS
F#  CH OP DATE    START      STOP       LK
033/2 /1 /01JAN91/0107:55.8/0200:00.0/N
```

b. The disk is declassified when the message **DISK ZEROIZE COMPLETE** appears in line one:

```
DISK ZEROIZE COMPLETE
F#  CH OP DATE    START      STOP       LK
  /  /  /       /    :  . /    :  . /
```

2-9.2 95% Fail.

The RRSS indicates when the disk is getting full (refer to paragraph 2-6.11, DISK FULL Indicator). When the disk is 95% full, the RRSS automatically begins deleting unprotected files (refer to paragraph 2-6.8.4, Lock and Unlock Files) until disk utilization is reduced below 80%. If a large number of files are protected (locked) the RRSS will not be able to delete files and free disk space; the ACP will indicate **95% DISK RECORVERY FAIL:**

```
95% DISK RECORVERY FAIL
```

NOTE

Files are deleted in chronological order. The first file deleted being the oldest file chronologically placed on disk, regardless of operator date and time settings.

When the disk is 100% full, the ACPs briefly indicates **DISK IS FULL**:

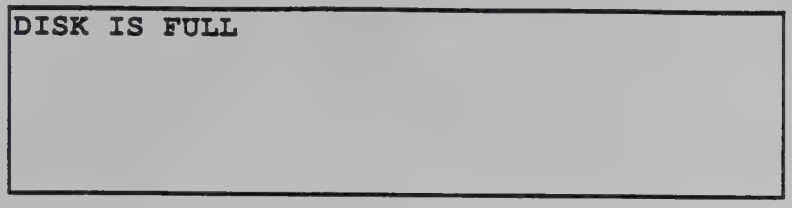

All files currently recording will automatically close and stop recording. The ACPs will then indicate **NO AUDIO AVAILABLE**:

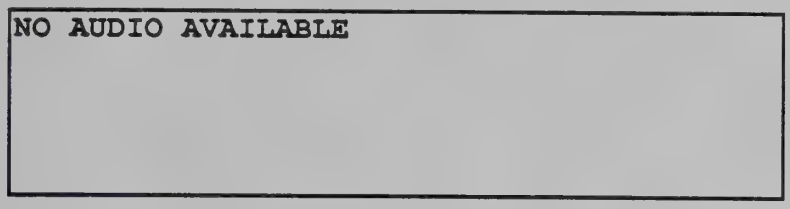

When the disk is full the RRSS has full functionality except record.

NOTE

If a full disk is inserted and the RRSS powered up, the **DISK FULL** indicator (3) will not come on. However, if you perform a disk related task, such as deleting a file, the **DISK FULL** indicator will then come on.

65123

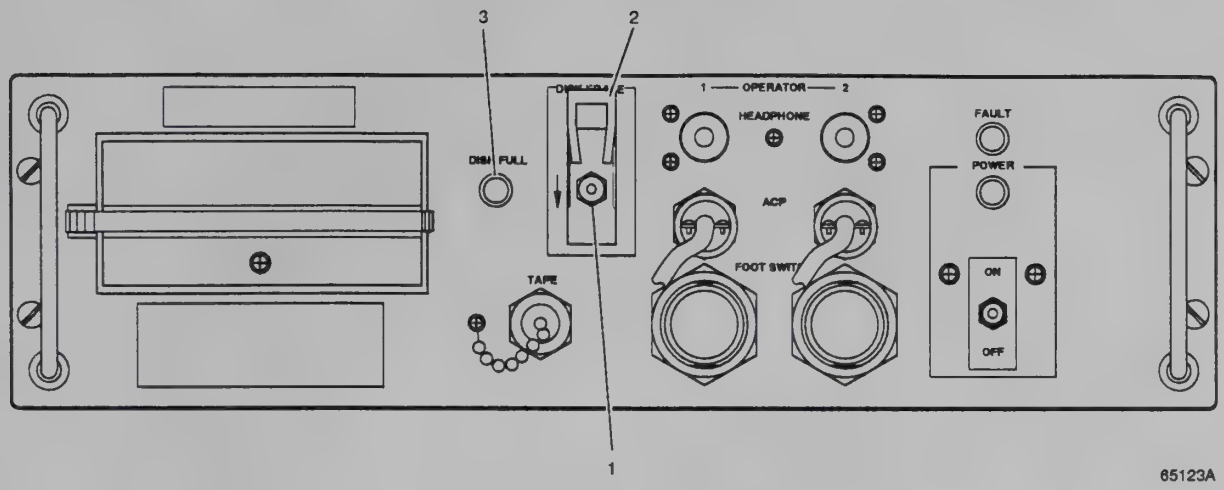
3
2
1
DSM FULL
1 —— OPERATOR —— 2
HEADPHONE
FAULT
POWER
ACP
TAPE
ON
OFF

65123A

CHAPTER 3

OPERATOR MAINTENANCE

There is no operator maintenance for the RRSS.

CHAPTER 4

ORGANIZATIONAL MAINTENANCE

Section I. Lubrication Instructions 4-1

Section II. Service Upon Receipt 4-1

4-1 Service Upon Receipt 4-1
4-2 Installation Instructions 4-2

Section III. Organizational Preventive Maintenance Checks and Services (PMCS) 4-2

Section IV. Organizational Troubleshooting Procedures 4-2

4-3 Introduction 4-2
4-4 Fault Symptom Index 4-2

Section V. Organizational Maintenance 4-3

4-5 Introduction 4-3
4-6 Replace RMA 4-4
4-7 Replace ACP 4-6
4-8 Replace Recorder 4-7
4-9 Replace LEDS DS1, DS2, and/or DS3 4-12

SECTION I. LUBRICATION INSTRUCTIONS

No lubrication is required for the RRSS.

SECTION II. SERVICE UPON RECEIPT

4-1 SERVICE UPON RECEIPT.

a. Inspect the equipment for damage incurred during shipment. If the equipment has been damaged, report the damage on SF 364, Report of Discrepancy.

b. Check the equipment against the packing slip to see if the shipment is complete. Report all discrepancies in accordance with the instructions of DA PAM 738-750 or DA PAM 738-751 as applicable.

4-2 INSTALLATION INSTRUCTIONS.

Refer to paragraph 2-4, Assembly and Preparation for Use, for installation instructions.

SECTION III. ORGANIZATIONAL PREVENTIVE MAINTENANCE CHECKS AND SERVICES (PMCS).

There are no organizational preventive maintenance checks and services for the RRSS.

SECTION IV. ORGANIZATIONAL TROUBLESHOOTING PROCEDURES

4-3 INTRODUCTION.

Troubleshooting of the RRSS at Organizational level maintenance consists of isolating the failure to the RMA, an ACP, the recorder, or LED(s). Upon finding a failed component the Organizational level technician will replace it. If the failed component is the recorder, send it to Direct Support level of maintenance for further repair.

4-4 FAULT SYMPTOM INDEX.

WARNING

HIGH VOLTAGE is present in this equipment. DEATH ON CONTACT may result if personnel fail to observe safety precautions. Learn the areas containing high voltage in each piece of equipment. Be careful not to contact high voltage connections when troubleshooting or repairing this equipment.

NOTE

Organizational level troubleshooting assumes all inputs are properly applied to the RRSS. Refer to appropriate system manual if RRSS inputs are faulty or suspect.

Match the fault symptom you are experiencing with a fault in the symptom index below and go to the appropriate fault logic diagram to start troubleshooting. The fault logic diagrams are foldouts at the back of the manual. If you are experiencing a symptom not listed in the index below, replace the recorder and notify Direct Support maintenance.

Fault Symptom	Foldout
RRSS fails upon power up and/or BIT FAILURE indication	FO 1
DISK FULL indicator does not illuminate and ACP and/or host controller has indicated disk is over 80% full (or 95% DISK RECOVERY FAIL)	FO 2
RRSS fails to respond to ACP and/or host controller commands or ACP and/or host controller hung-up or showing no message	FO 3
Failure of any operator function (e.g., record, playback, etc.)	FO 4
No host communication	FO 5
No Audio in headphone(s)	FO 6

SECTION V. ORGANIZATIONAL MAINTENANCE

4-5 INTRODUCTION.

NOTE

After replacing any component, be sure the RRSS passes BIT and the original fault symptom has been fixed.

Organizational level maintenance of the RRSS consists of replacing the RMA, an ACP, the recorder, or LED(s). Upon finding a failed component the Organizational level technician will replace it. If the failed component is the recorder, send it to Direct Support level of maintenance for further repair.

4-6 REPLACE REMOVABLE MEMORY ASSEMBLY.

INITIAL SETUP

Tools:	Personnel Required:
None	MOS basic 98G
Material/Parts:	**Equipment Conditions:**
Not applicable	RRSS shut down (paragraph 2-6.12)

REMOVAL

a. While grasping RMA handle (1), depress handle release button (2) on right side of RMA handle (1) until locking handle (3) is released.

b. Extend locking handle (3) fully away from recorder (4) to disengage locking handle (3) from fork (5).

c. Slide RMA (6) out of recorder (4).

d. Close and lock locking handle (3).

65124 (1/2 page)

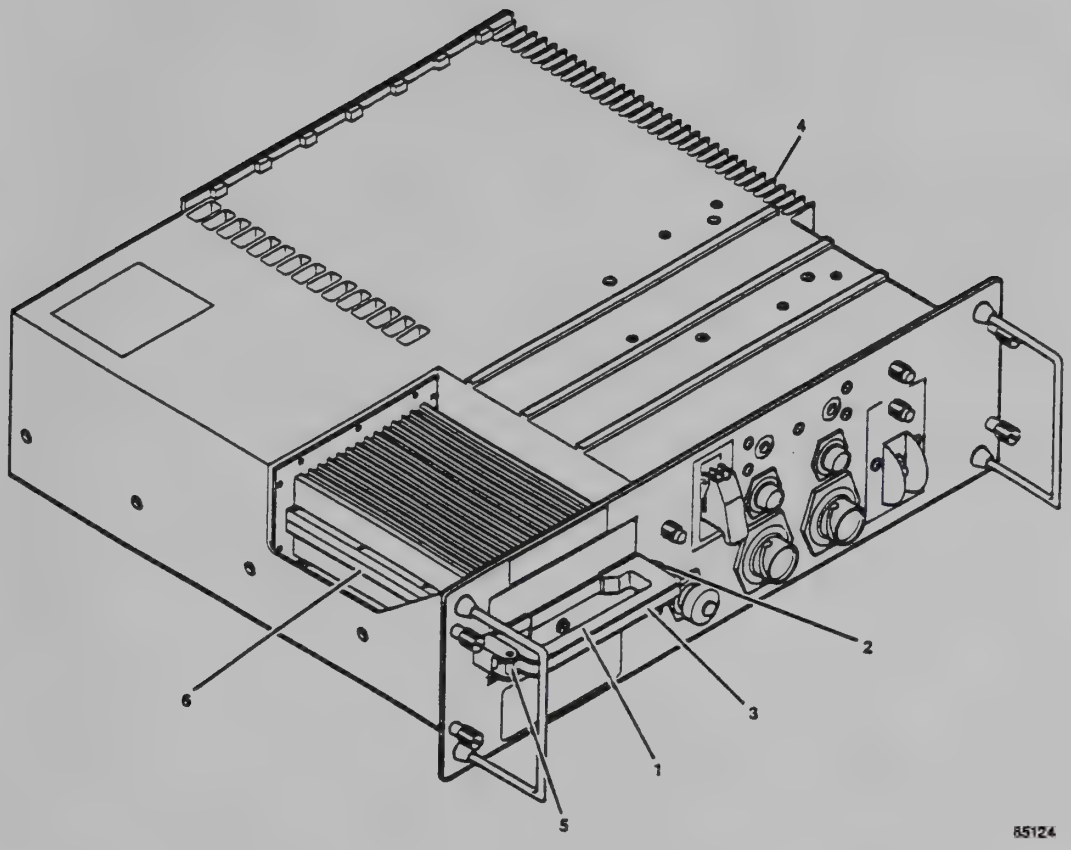
4
2
3
1
5
6
85124

REPAIR/REPLACEMENT

NOTE

Handle and store an RMA containing classified information in accordance with applicable security procedures. If the failed RMA contains classified data and cannot be zeroized, the RMA must be destroyed. Destruction of the RMA is considered complete when the internal platters (disks) of the RMA have been shattered.

Repair of the RRSS is accomplished by replacement of the RMA. No Organizational level repair of the RMA is authorized.

INSTALLATION

a. While grasping RMA handle (1), depress handle release button (2) on right side of RMA handle until locking handle (3) is released.

b. Carefully slide RMA (6) into recorder (4) ensuring locking handle (3) engages fork (5).

c. Close and lock locking handle (3).

d. Run BIT (see paragraph 2-6.2, Power-Up) and perform RRSS operational tasks exhibiting original symptom(s) to verify repair.

4-7 REPLACE ALTERNATE CONTROL PANEL.

INITIAL SETUP

Tools:	Personnel Required:
None	MOS basic 98G
Material/Parts:	**Equipment Conditions:**
Not applicable	RRSS shut down (paragraph 2-6.12)

REMOVAL

a. Rotate locking ring (1)on applicable ACP cable connector (2) counter-clockwise to disengage ACP cable connector from recorder front panel connector (3).

b. Remove ACP (4).

65125(4 in.)

REPAIR/REPLACEMENT

Repair of the RRSS is accomplished by replacement of the ACP. No Organizational level repair of the ACP is authorized.

INSTALLATION

a. Align polarizing keys (5) on ACP cable connector (2) with polarizing grooves (6) in applicable recorder front panel connector (3) and push ACP cable connector onto front panel connector.

b. Rotate locking ring (2) clockwise until it stops.

c. Run BIT (see paragraph 2-6.2, Power-Up) and perform RRSS operational tasks exhibiting original symptom(s) to verify repair.

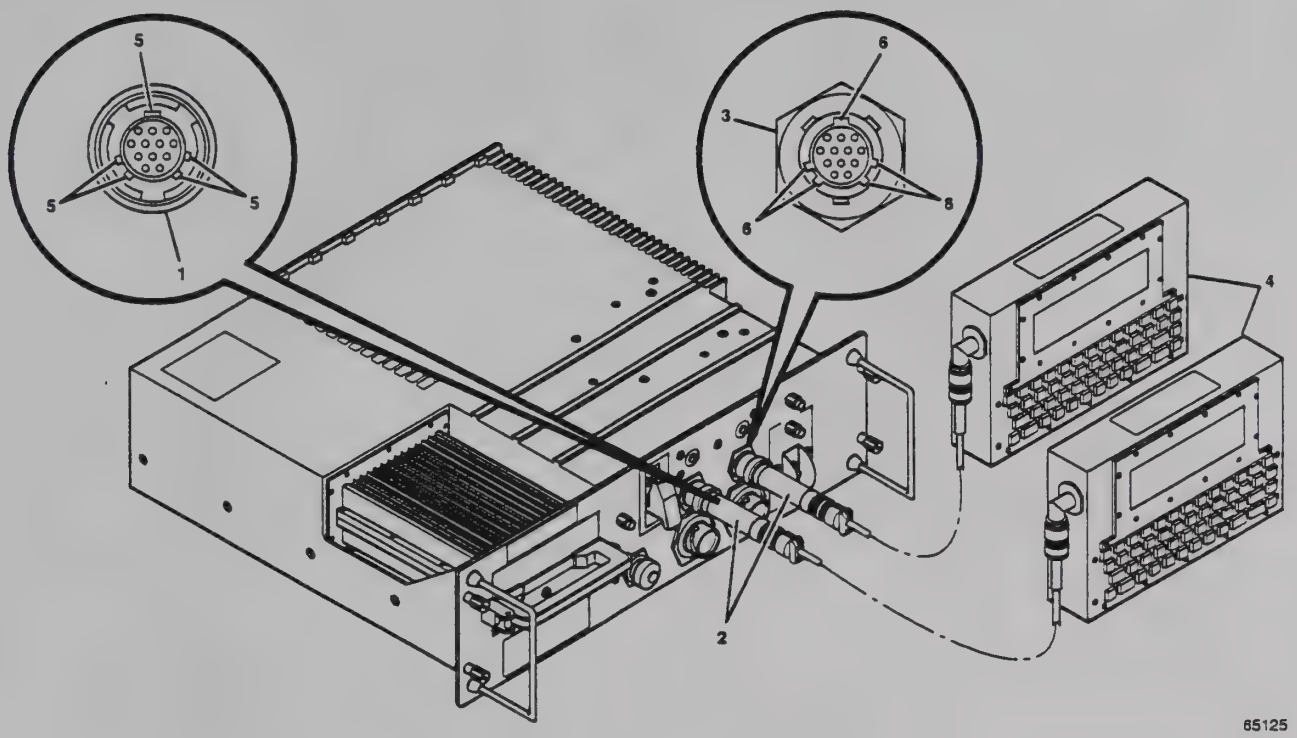
5
5
5
1
6
3
8
6
4
2
65125

4-8 REPLACE RECORDER-REPRODUCER, SOUND RD-634/UYH-15.

INITIAL SETUP

Tools:
None

Personnel Required:
MOS basic 98G

Material/Parts:
Not applicable

Equipment Conditions:
RRSS shut down (paragraph 2-6.12)

REMOVAL

a. Remove RMA (see paragraph 4-6, Removal).

b. Remove ACP(s) (see paragraph 4-7, Removal).

c. Remove power from RRSS (refer to applicable system manual).

d. If applicable, rotate locking ring(s) (7) on foot switch cable connector(s) (8) counter-clockwise and disconnect foot switch cable connector(s) from recorder front panel **OPERATOR 1** and/or **OPERATOR 2 FOOT SWITCH** connectors (9).

e. If applicable, pull headphone cable connector(s) (10) from recorder front panel **OPERATOR 1** and/or **OPERATOR 2 HEADPHONE** jack(s) (11).

f. If applicable, rotate locking ring (12) on tape cable connector (13) counter-clockwise and disconnect tape cable connector from recorder front panel **TAPE** connector (14).

g. Install attached protective cover (15) on recorder **TAPE** connector (14).

65137 (4.5 in.)

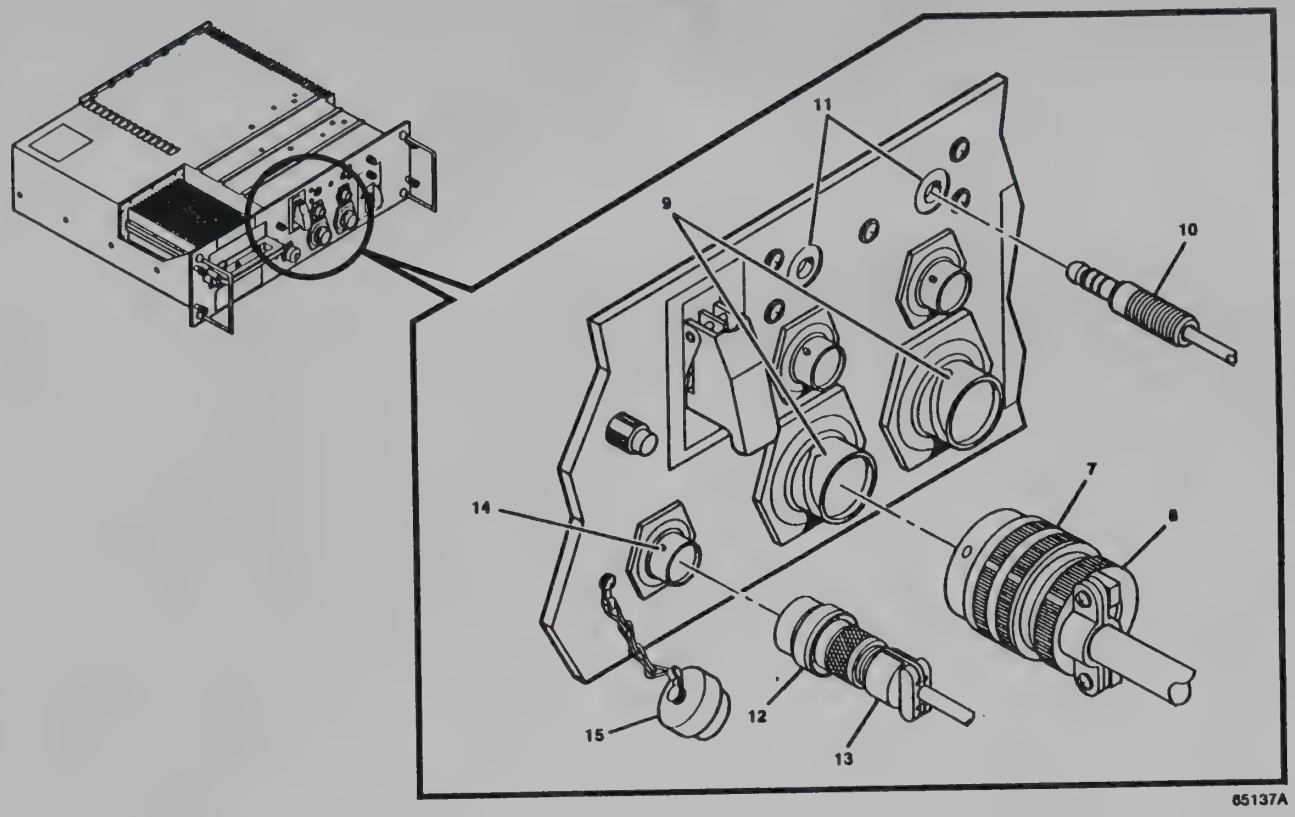
11
9
10
14
7
8
15
12
13
65137A

NOTE

The recorder may be rack mounted. Depending on the mounting arrangement, you may need to remove and retain mounting hardware to gain access to rear of unit.

h. Rotate locking ring (1) on power cable connector (2) counter-clockwise and disconnect power cable connector from recorder rear panel **POWER** connector (3).

i. If applicable, rotate locking ring (4) on host cable connector (5) counter-clockwise and disconnect host cable connector from recorder rear panel **HOST** connector (6).

j. If applicable, rotate locking ring (7) on audio cable connector (8) counter-clockwise and disconnect audio cable connector from recorder rear panel **AUDIO IN/OUT** connector (9).

k. If applicable, rotate locking ring(s) (10) on audio cable (11) connector(s) counter-clockwise and disconnect audio cable connector(s) from recorder rear panel **OPER 1** and/or **OPER 2** connector(s) (12).

l. If applicable, rotate clock cable connector (13) locking ring (14) counter-clockwise and disconnect clock cable connector from recorder rear panel **CLOCK** connector (15).

m. If applicable, remove nut (16), lockwasher (17), and flatwasher (18), securing system ground wire(s) (19) from rear panel **GND** post (20). Remove ground wire(s) from **GND** post.

n. Install attached protective covers (21 and 22) on recorder **CLOCK** (15), and **HOST** (6) connectors.

o. If applicable, remove recorder from rack (refer to applicable system manual).

REPAIR/REPLACEMENT

Repair of the RRSS is accomplished by replacement of the recorder. No Organizational level repair of the recorder is authorized.

INSTALLATION

a. If applicable, install recorder in rack (refer to applicable system manual).

b. If applicable, position system ground wire(s) (19) to rear panel **GND** post (20) and install nut (16), lockwasher (17), and flatwasher (18).

c. Connect power cable connector (2) to rear panel **POWER** connector (3):

(1) Align polarizing keys (23) on power cable connector (2) with polarizing grooves (24) in recorder rear panel **POWER** connector (3) and push power cable connector onto rear panel **POWER** connector.

(2) Rotate locking ring (1) clockwise until it stops.

d. If applicable, remove protective covers (21 and 22) from recorder **CLOCK** and **HOST** connectors (15 and 6).

e. If applicable, connect clock cable connector (14) to rear panel **CLOCK** connector (15), rotate locking ring (13) clockwise until it stops.

f. If applicable, connect audio cable connector(s) (11) to rear panel **OPER 1** and/or **OPER 2** connector(s) (12):

(1) Align polarizing keys (23) on audio cable connector(s) (11) with polarizing grooves (24) in recorder rear panel **OPER 1** and/or **OPER 2** connector(s) (12) and push audio cable connector(s) onto rear panel **OPER 1** and/or **OPER 2** connector(s).

(2) Rotate locking ring(s) (10) clockwise until it stops.

65138 (full page)

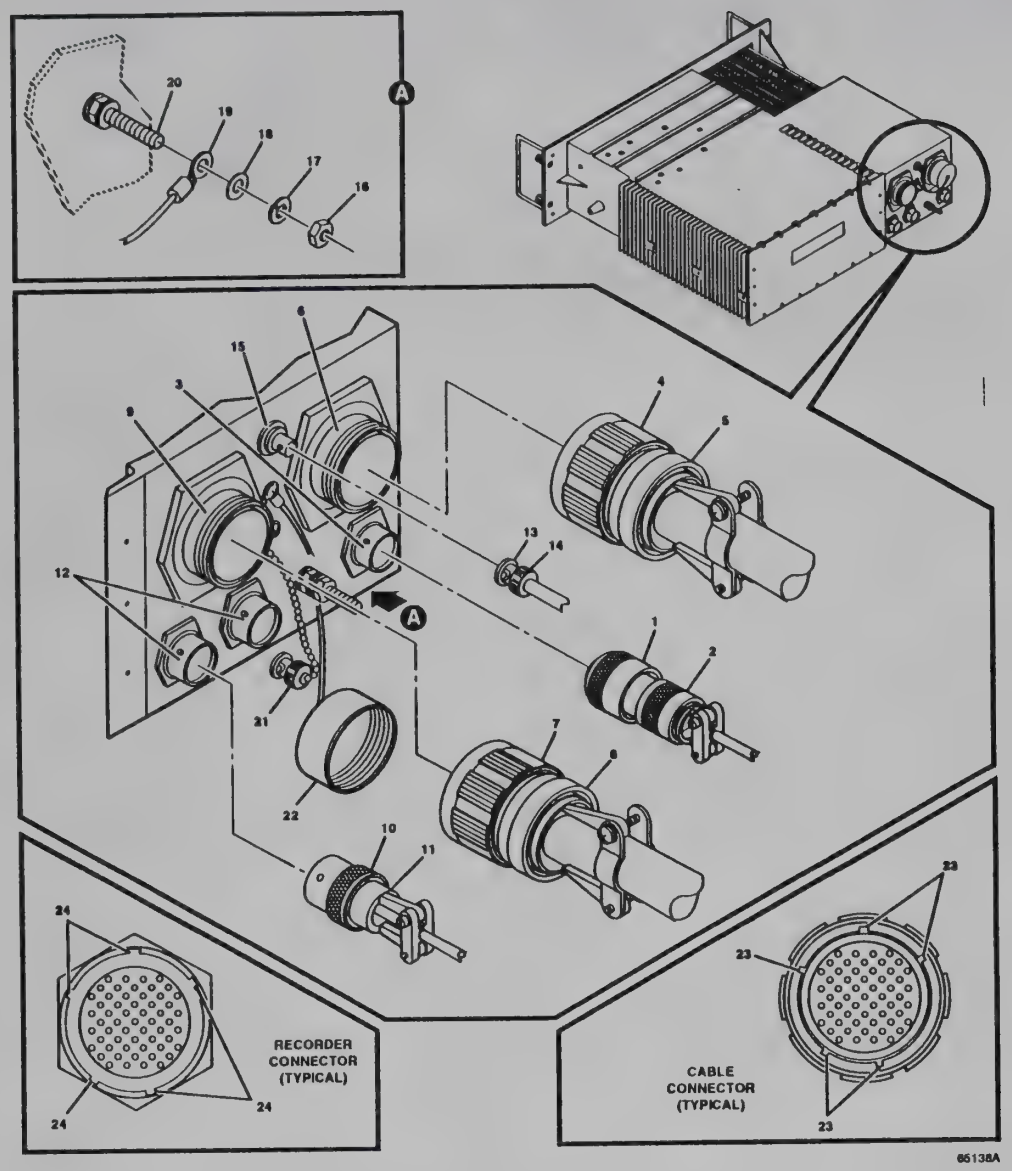
20
19
18
17
16
A
15
6
3
9
4
5
13
14
12
A
1
2
21
7
8
22
10
11
24
24
24
RECORDER
CONNECTOR
(TYPICAL)
23
23
23
CABLE
CONNECTOR
(TYPICAL)
65138A

g. If applicable, connect audio cable connector (1) to rear panel **AUDIO IN/OUT** connector (2):

(1) Align polarizing keys (3) on audio cable connector (1) with polarizing grooves (4) in recorder rear panel **AUDIO IN/OUT** connector(2).

(2) Rotate locking ring (5) clockwise to secure cable.

h. If applicable, connect host interface cable connector (6) to rear panel **HOST** connector (7):

(1) Align polarizing keys (3) on host interface cable connector (6) with polarizing grooves (4) in recorder rear panel **HOST** connector (7).

(2) Rotate locking ring (8) clockwise to secure cable.

65139 (7 in.)

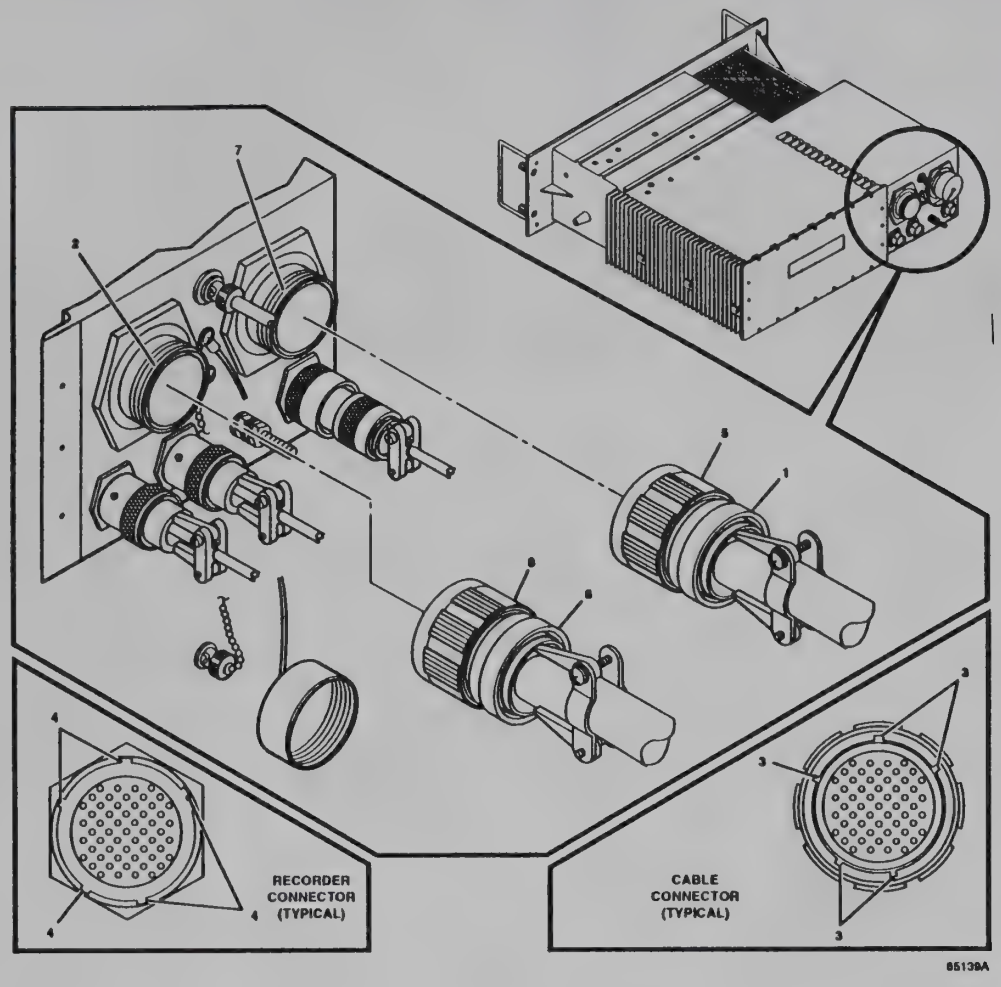
7
2
1
8
6
4
RECORDER
CONNECTOR
(TYPICAL)
4
4
2
3
CABLE
CONNECTOR
(TYPICAL)
3
85139A

65140 (4.5 in.)

i. If applicable, remove protective cover (9) from front panel **TAPE** connector (10).

j. If applicable, connect tape cable connector (11) to front panel **TAPE** connector (10):

   (1) Align polarizing keys (12) on tape cable connector (11) with polarizing grooves (13) in recorder front panel **TAPE** connector (10) and push tape cable connector onto front panel **TAPE** connector.

   (2) Rotate locking ring (14) clockwise until it stops.

k. If applicable, push headphone cable connector(s) (15) into front panel **OPERATOR 1** and/or **OPERATOR 2 HEADPHONE** jack(s) (16).

l. If applicable, connect foot switch cables connector(s) (17) to front panel **OPERATOR 1** and/or **OPERATOR 2 FOOT SWITCH** connector(s) (18):

   (1) Align polarizing keys (12)on foot switch cable connector(s) (17) with polarizing grooves (13) in recorder front panel **OPERATOR 1** and/or **OPERATOR 2 FOOT SWITCH** connector(s) (18) and push foot switch cable connector(s) onto front panel **OPERATOR 1** and/or **OPERATOR 2 FOOT SWITCH** connector(s).

   (2) Rotate locking ring(s) (19) clockwise until it stops.

m. Install ACP(s) (see paragraph 4-7, Installation).

n. Install RMA (see paragraph 4-6, Installation).

o. Run BIT (see paragraph 2-6.2, Power-Up) and perform RRSS operational tasks exhibiting original symptom(s) to verify repair.

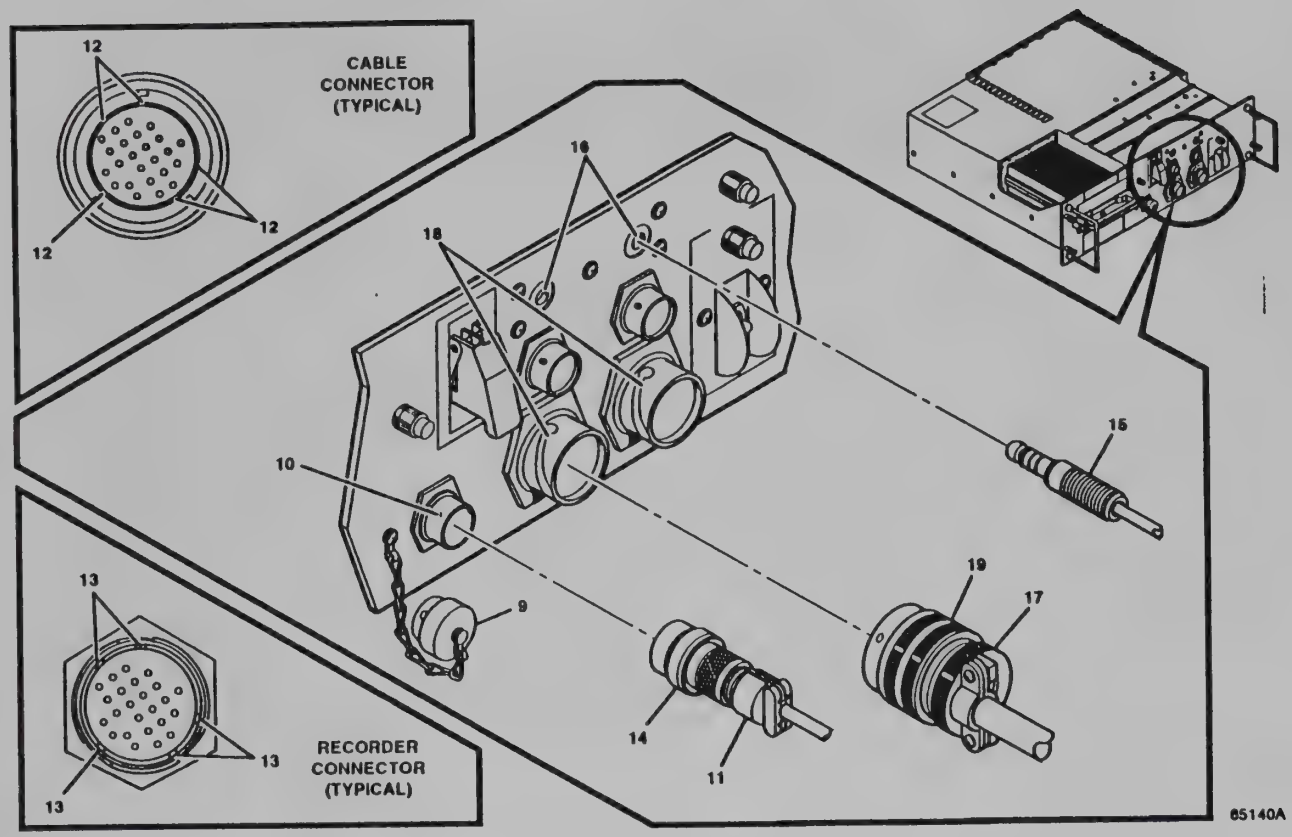
CABLE
CONNECTOR
(TYPICAL)
12
12
12
16
18
15
10
9
19
17
14
11
13
13
13
RECORDER
CONNECTOR
(TYPICAL)
65140A

4-9 REPLACE LEDS DS1, DS2, AND/OR DS3.

INITIAL SETUP

Tools:
None

Personnel Required:
MOS basic 98G

Material/Parts:
Not applicable

Equipment Conditions:
RRSS shut down (paragraph 2-6.12)

REMOVAL

NOTE

FAULT LED is red, **DISK FULL** LED is yellow, and **POWER** LED is green.

a. Unscrew knurled knob ring (1) securing LED (2) to socket (3).

b. Grasp LED (2) and pull from socket (3).

REPAIR/REPLACEMENT

Repair of the RRSS is accomplished by replacement of the LED(s). No Organizational level repair of the LED(s) is authorized.

INSTALLATION

a. Align LED pins (4) with socket (1) and push LED (2) into socket.

b. Install knurled ring (1) on LED socket (3).

c. Run BIT (see paragraph 2-6.2, Power-Up) and perform RRSS operation tasks exhibiting original symptom(s) to verify repair.

64141 (4 in.)

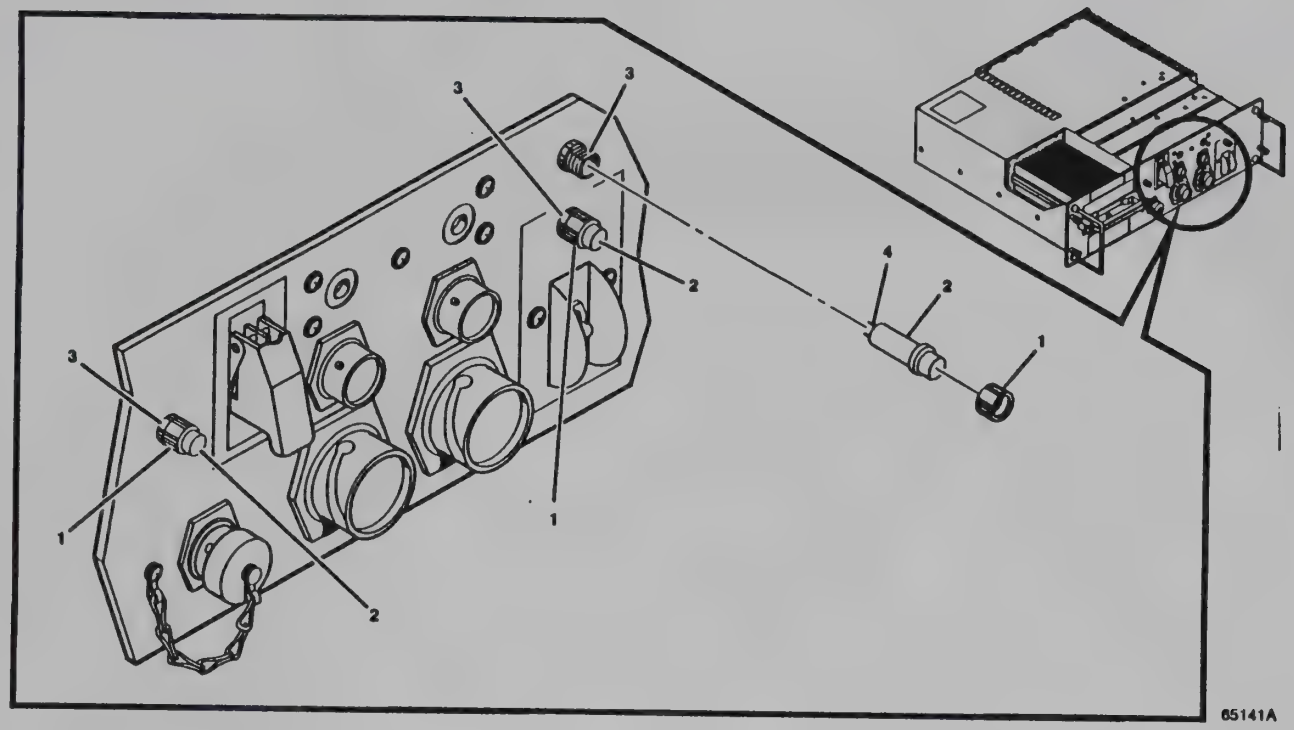
3
3
2
1
3
1
2
4
2
1
65141A

CHAPTER 5

DIRECT SUPPORT MAINTENANCE

Section I. Lubrication Instructions 5-1

Section II. Direct Support Preventive Maintenance Checks and Services (PMCS) 5-1

Section III. Direct Support Troubleshooting Procedures 5-2

5-1 Introduction 5-2
5-2 Fault Symptom Index 5-2
5-3 Test Setup 5-2

Section IV. Direct Support Maintenance 5-7

5-4 Introduction 5-7
5-5 Replace Bottom Cover 5-8
5-6 Replace Card Cage Cover 5-10
5-7 Replace Host J5 and Clock J6 Connector Cover 5-11
5-8 Replace Tape J7 Connector Cover 5-12
5-9 Replace Bow Handle 5-13
5-10 Replace CB1 Guard 5-14
5-11 Replace S1 Guard 5-15
5-12 Replace J1 Connector 5-16
5-13 Replace Circuit Breaker CB1 5-20
5-14 Replace Memory Interface Group 5-22
5-15 Replace Audio EMI Filter 5-34
5-16 Replace Motherboard CCA 5-38
5-17 Repair Motherboard CCA 5-43
5-18 Replace Audio CCA 5-44
5-19 Replace CP CCA 5-46
5-20 Replace Power Supply Module 5-48
5-21 Repair Chassis-Electrical Equipment 5-49
5-22 Replace Audio Wire Harness 5-50
5-23 Repair Audio Wire Harness 5-56
5-24 Replace CP Wire Harness 5-57
5-25 Repair CP Wire Harness 5-61
5-26 Replace Power EMI Filter 5-62

SECTION I. LUBRICATION INSTRUCTIONS

No lubrication is required for the RRSS.

SECTION II. DIRECT SUPPORT PREVENTIVE MAINTENANCE CHECKS AND SERVICES (PMCS)

There are no direct support preventive maintenance checks and services for the RRSS.

SECTION III. DIRECT SUPPORT TROUBLESHOOTING PROCEDURES

5-1 INTRODUCTION.

Troubleshooting at Direct Support level maintenance consists of isolating the failure to a recorder component. Upon finding a failed component the Direct Support level technician will replace it. If the recorder still does not pass tests, send it to Depot level of maintenance for further repair.

5-2 FAULT SYMPTOM INDEX.

WARNING

HIGH VOLTAGE is present in this equipment. DEATH ON CONTACT may result if personnel fail to observe safety precautions. Learn the areas containing high voltage in each piece of equipment. Be careful not to contact high voltage connections when troubleshooting or repairing this equipment.

NOTE

Direct Support troubleshooting assumes Organizational maintenance troubleshooting has been performed.

NOTE

Direct Support level troubleshooting assumes all applicable inputs are properly applied to the recorder. Refer to Direct Support test setup procedures (paragraph 5-3) and connect inputs as applicable .

Match the fault symptom you are experiencing with a fault in the symptom index below and go to the appropriate fault location logic diagram to start troubleshooting. The fault location logic diagrams are fold outs at the back of the manual. If you are experiencing a symptom not listed in the index below notify Depot maintenance.

Fault Symptom	Foldout
POWER indicator fails to illuminate	FO 7
BIT FAILURE indication on ACP(s) and/or host controller	FO 8
No Audio in headphone(s)	FO 9
Recorder fails to respond to ACP and/or host controller commands, ACP and/or host controller hung-up or showing no message, or failure of any operator function (e.g. record, playback, etc.)	FO 10
No host communication.	FO 11

5-3 TEST SETUP.

Direct Support level troubleshooting requires applicable inputs be properly applied to the recorder in order to establish fault symptoms. In Addition, Direct Support Level Maintenance requires you to verify the fault symptom has been corrected after a component has been replaced. The following paragraphs provide setup instructions for Direct Support level troubleshooting and recorder repair verification.

5-3.1 General Test Setup.

The following procedure provides general setup instructions for troubleshooting and testing the recorder after most components have been replaced. Not all steps may be required, for example, if the original symptom did not involve the foot switches, foot switches need not be used for troubleshooting or to repair verification. Steps which may not be required are so indicated. Additional setup procedures are provided in following paragraphs for troubleshooting and verifying repair of power, audio and host interface malfunctions.

a. Connect ACP(s) to RRSS front panel.

CAUTION

Connect each input voltage one at a time. Simultaneously connecting two or more inputs can damage the equipment.

b. Connect 230 VAC, 115 VAC, or 28 VDC power source to RRSS POWER connector J1 (refer to appendix F, for power cable manufacturing instructions).

c. If required, connect headset(s).

d. If required, connect foot switch(es).

5-3.2 Power Malfunction Test Setup .

Troubleshoot and verify repair of RRSS power circuitry by operating the unit from each of the three input voltages.

CAUTION

Connect each input voltage one at a time. Simultaneously connecting two or more inputs can damage the equipment.

a. Connect 230 VAC, 115 VAC, or 28 VDC power source to RRSS POWER connector J1 (refer to appendix F, for power cable manufacturing instructions).

b. Power-Up the RRSS (refer to paragraph 2-6.2, Power-Up).

c. Shut Down the RRSS (refer to paragraph 2-6.12, Shut Down).

d. Repeat steps a thru c for each of the remaining operating voltages.

e. Repair is complete when unit passes BIT for each of the operating voltages.

5-3.3 Audio Malfunction Test Setup.

Troubleshoot and verify repair of RRSS audio circuitry by injecting an audio signal on the defective input channel or monitoring an output from the defective output channel.

CAUTION

The RRSS Audio CCA can be damaged by injecting an audio signal with a level in excess of 2.45 VRMS.

NOTE

The RRSS provides either 600 ohm or >10k ohms audio input impedance, depending on the jumper configuration of the audio cable connected to **AUDIO IN/OUT J4**.

a. Connect 230 VAC, 115 VAC, or 28 VDC power source to RRSS POWER connector J1 (refer to appendix F, for power cable manufacturing instructions).

b. Connect ACP(s).

c. Connect headphone(s).

d. Connect audio signal generator SG-735/URM-165, AN/URM-127, or equivalent to RRSS **AUDIO IN/OUT J4**, **OPER 1 J2**, or **OPER 2 J3** connectors as shown below (refer to appendix F, for audio cable manufacturing instructions).

65180
(8 in
high)

e. Power-up the RRSS (refer to paragraph 2-6.2, Power-Up).

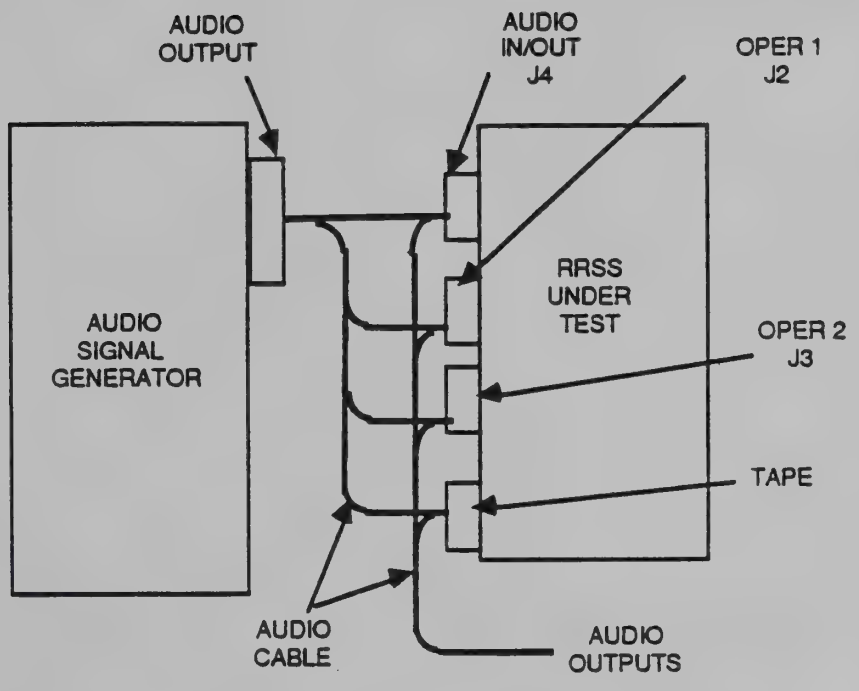

65180
(8 in high)

f. Refer to the table below and inject the applicable audio signal on input as required.

Input Signal	Signal Level	Comments
Tape In	1 kHz, 0 dBm (0.77 VRMS)	600 ohm
Operator 1 and 2 Commentary	1 kHz, 0 dBm (0.77 VRMS)	600 ohm (Commentary is recorded only when an active signal is also being recorded)
Input Channels 1 through 4	1 kHz, 0 dBm (0.77 VRMS)	600 ohm, jumper installed between channel termination and audio in (-)
Input Channels 1 through 4	1 kHz, 0 dBm (3.16 VRMS)	>10K ohm, jumper removed between channel termination and audio in (-)

(1). Depending upon symptom:

(a) Record signal being injected (refer to paragraph 2-6.4, Record Signals).

(b) Playback recorded signal (refer to paragraph 2-6.5, Play Back recordings).

(c) Monitor signal on headphone(s) on front panel of unit under test or on audio test cable as applicable for symptom.

(2). Symptom is fixed when audio signal is heard.

5-3.4 Host Interface Malfunction Test Setup

Troubleshoot and verify repair of RRSS host connector or host portion of CP wiring harness by sending commands from an AN/PSM-80 and monitoring reply received and actiction taken by RRSS

a. Connect 230 VAC, 115 VAC, or 28 VDC power source to RRSS POWER connector J1 (refer to appendix F, for power cable manufacturing instructions).

b. Setup AN/PSM-80(V) Test Set in accordance with applicable equipment manual.

c. Connect Host interface cable between AN/PSM-80 and RRSS under test in accordance with figure below (refer to appendix F, for Host Interface cable manufacturing instructions).

65181

d. Connect ACP(s).

e. Power-up the RRSS (refer to paragraph 2-6.2, Power-Up).

f. Power-Up AN/PSM-80(V) Test Set in accordance with applicable equipment manual.

g. Insert floppy disk, part number TBD, NSN TBD, in Test Set in accordance with applicable equipment manual.

h. On the Test Set type " a:hosti " and press **Enter**. The Host simulator program on the floppy disk will start and the Test Set screen will display "RS232>".

i. To test the RS232 interface perform the following procedure, to test the IEEE-488 interface, go to step j.

(1) On the Test Set type "50 7A 0D" and press **Enter**. The unit under test will perform a restart. Upon successful completion of BIT the Test Set screen will display "65 A6 59 7D 7D 0D".

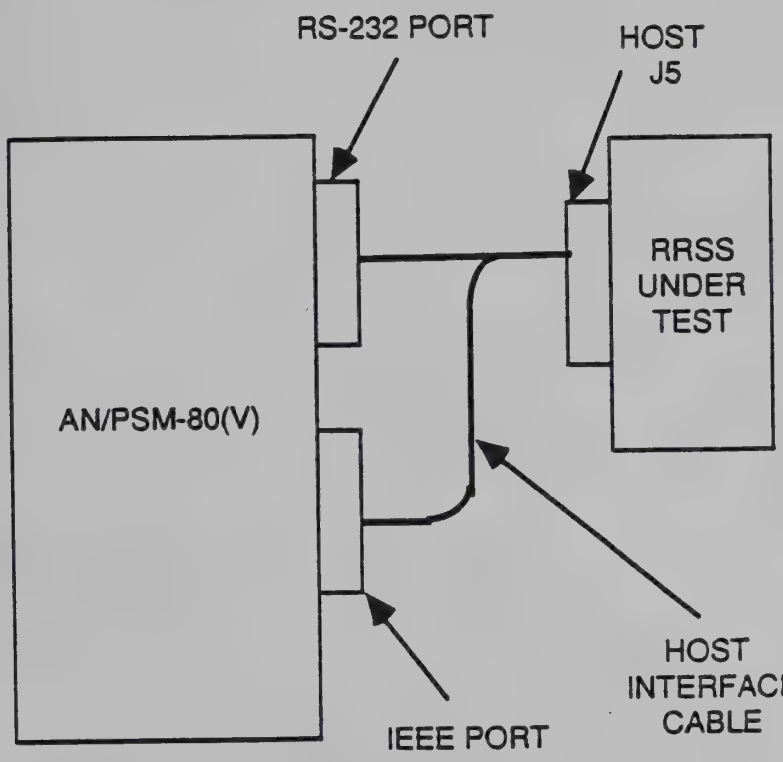

65181
4.5 in high

(2) On the Test Set type "50 5C 0D" and press **Enter**. The Test Set screen will display "65 A2 nnn hmm 0D". Where n, h, and m are 2 digit numbers between 30 and 39.

j. To test the IEEE-488 interface perform the following procedure:

(1) On the Test Set type "port" and press **Enter**. The Test Set screen will display "Select port: (R=RS232, I=IEEE-488)".

(2) On the Test Set type " i " and press **Enter**. The Test Set screen will display "Enter port address>".

(3) On the Test Set type " 21" and press **Enter**. The Test Set screen will display "IEEE>".

(4) On the Test Set type "50 01 00 7A" and press **Enter**. The unit under test will perform a restart. Upon successful completion of BIT the Test Set screen will display "65 04 00 a6 59 7D 7D".

(5) On the Test Set type "50 01 00 5C" and press **Enter**. The Test Set screen will display "65 07 00 A2 nnnhmm". Where n, h, and m are 2 digit numbers between 30 and 39.

k. Repair of the host interface circuitry is complete when correct indications have been received for the RS232 and the IEEE-488 interfaces.

l. Other commands available for the Test Set are listed below;

- Port Allows selection of data ports (RS232 or IEEE-488).
- Exit Quits Host Simulator program.
- Cls Clears Test Set data screen.
- Help Displays the Test Set's Host Simulator help screen.

SECTION IV. DIRECT SUPPORT MAINTENANCE

5-4 INTRODUCTION.

NOTE

After replacing any component, be sure the RRSS passes BIT and the original fault symptom has been fixed.

Direct Support level maintenance of the RRSS consists of replacing components within the recorder. Upon finding a failed component the Direct Support level technician will replace it. If recorder cannot be fixed, send it to Depot level of maintenance for further repair.

5-5 REPLACE BOTTOM COVER.

INITIAL SETUP

Tools:
Electrical Equipment Tool Kit, TK-105/G

Personnel Required:
MOS basic 33T

Material/Parts:
None

Equipment Conditions:
Recorder removed from system, power disconnected.

REMOVAL

WARNING

High voltage is present in this equipment. Death on contact may result if personnel fail to observe safety precautions. Learn the areas containing high-voltage in the equipment. Be careful not to contact high-voltage connections when troubleshooting or repairing this equipment.

CAUTION

The recorder contains class 1 electrostatic sensitive devices. Use special handling to prevent damage from electrostatic discharge transients.

a. Carefully turn unit over so bottom is exposed.
b. Remove 40 screws (1) securing cover (2) to recorder chassis (3).
c. Remove bottom cover (2).

REPAIR/REPLACEMENT

Repair of the recorder chassis is accomplished by replacement of the bottom cover.

INSTALLATION

NOTE

The bottom cover must be secure to prevent electromagnetic interference and emissions. Tighten cover screws carefully, using proper tool.

a. Position bottom cover (2) to recorder chassis (3).
b. Secure cover to chassis with 40 screws (1).
c. Carefully turn unit upright.

65142 (1/2 page)

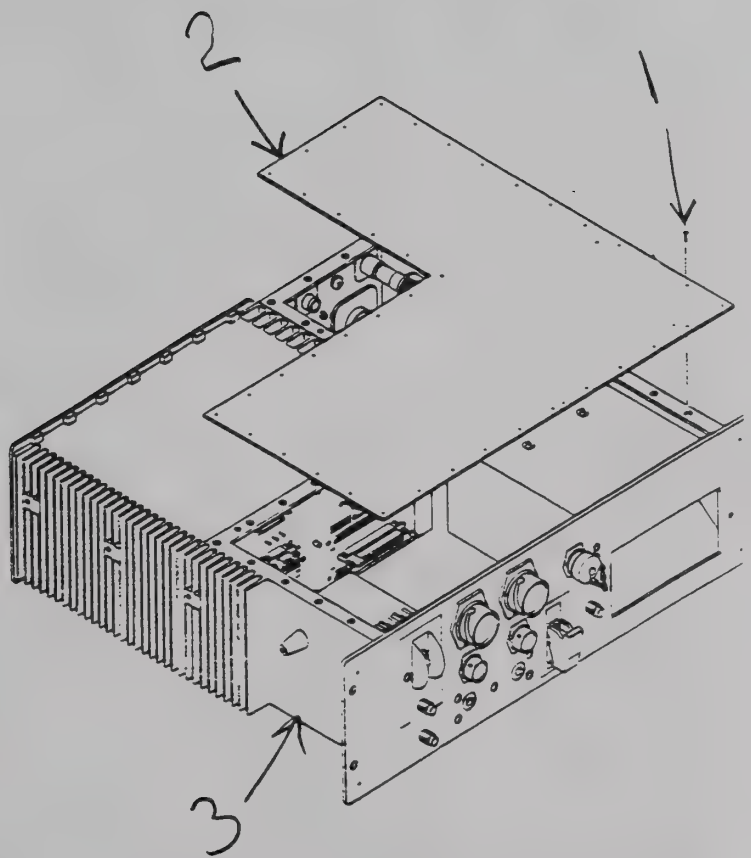

65142

(1/2 page)

5-6 REPLACE CARD CAGE COVER.

INITIAL SETUP

Tools:
Electrical Equipment Tool Kit, TK-105/G

Personnel Required:
MOS basic 33T

Material/Parts:
None

Equipment Conditions:
Recorder removed from system, power disconnected.

REMOVAL

a. Remove 20 screws (1), lockwashers (2), and flatwashers (3) securing card cage cover (4) to recorder chassis (5).

b. Remove card cage cover (4).

REPAIR/REPLACEMENT

Repair of the recorder chassis is accomplished by replacement of the card cage cover.

INSTALLATION

NOTE

Position card cage cover so its bottom edge does not extend below bottom of chassis.

a. Position cover (4) on rear of recorder chassis (5).

b. Secure cover to chassis using 20 screws (1), lockwashers (2), and flatwashers (3).

65143 (1/2 page)

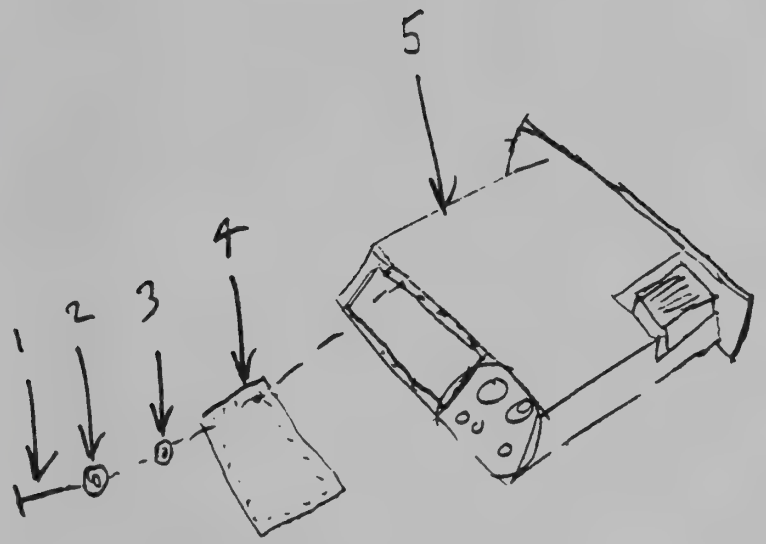

65143

1/2 page

5-7 REPLACE HOST J5 AND CLOCK J6 CONNECTOR COVER.

INITIAL SETUP

Tools:
Electrical Equipment Tool Kit, TK-105/G

Personnel Required:
MOS basic 33T

Material/Parts:
None

Equipment Conditions:
Bottom cover removed (paragraph 5-5)

REMOVAL

a. Remove screw (6), lockwasher (7), two flatwashers (8), and hex nut (9) securing **HOST** and **CLOCK** connector cover chains (10) to chassis (11).

b. Remove applicable cover (12) from **HOST** or **CLOCK** connector (13).

65145 (1/2 page)

REPAIR/REPLACEMENT

Repair of the recorder chassis is accomplished by replacement of the connector cover.

INSTALLATION

NOTE

Covers provide protection from electromagnetic interference and environmental damage.

a. Install applicable cover (12) on **HOST** or **CLOCK** connector (13).

b. Install screw (6), lockwasher (7), two flatwashers (8), and hex nut (9) securing **HOST** and **CLOCK** connector cover chains (10) to chassis (11).

c. Install bottom cover (refer to paragraph 5-).

Artist:
show bottom
cover removed

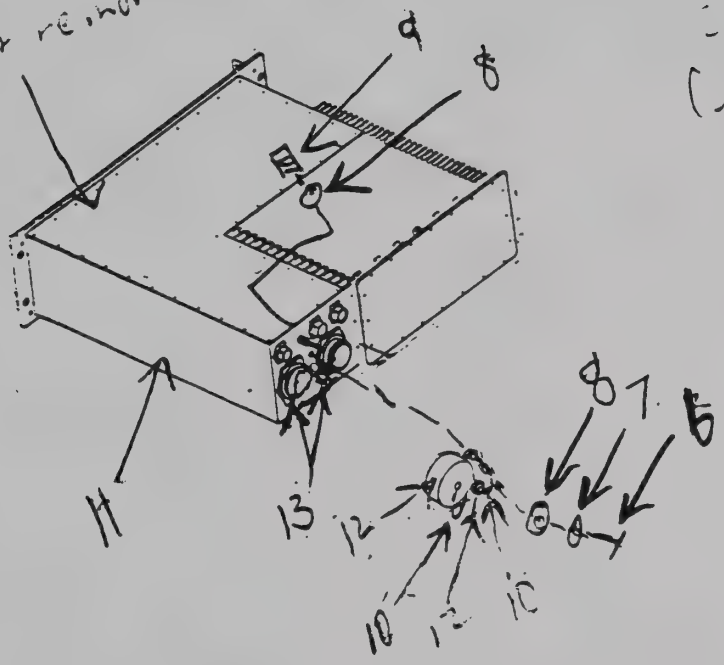

Artist:
Show bot-
[illegible]
(item 5)
exploded

65145
(1/2 page)

5-8 REPLACE TAPE J7 CONNECTOR COVER.

INITIAL SETUP

Tools:
Electrical Equipment Tool Kit, TK-105/G

Personnel Required:
MOS basic 33T

Material/Parts:
None

Equipment Conditions:
Bottom cover removed (paragraph 5-5)

REMOVAL

a. Remove screw (1), lockwasher (2), two flatwashers (3), and hex nut (4) securing cover chain (5) to chassis (6).

b. Remove cover (7) from **TAPE** connector (8).

65144 (1/2 page)

REPAIR/REPLACEMENT

Repair of the recorder chassis is accomplished by replacement of the connector cover.

INSTALLATION

a. Remove and discard 'S' hook from chain (5) and install cover (7) on **TAPE** connector (8).

b. Install screw (1), lockwasher (2), two flatwashers (3), and hex nut (4) securing cover chain (5) to chassis (6).

c. Install bottom cover (refer to paragraph 5-5).

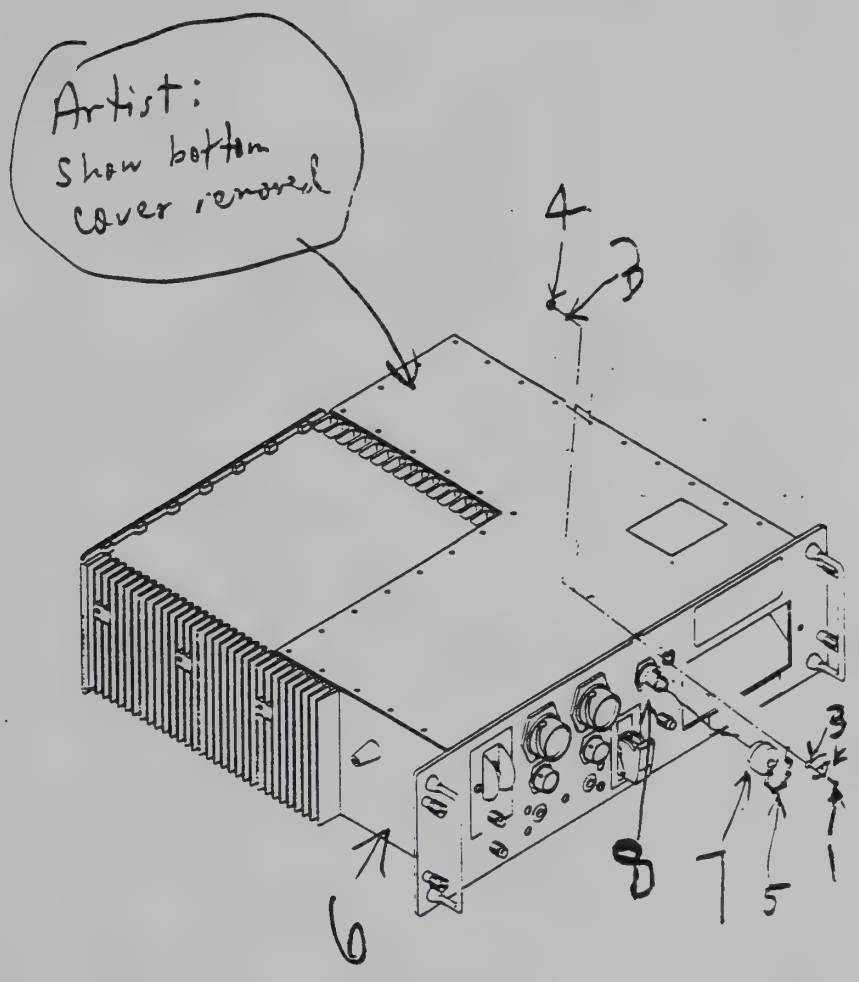

65144
1/2 page

5-9 REPLACE BOW HANDLE.

INITIAL SETUP

Tools:	Personnel Required:
Electrical Equipment Tool Kit, TK-105/G	MOS basic 33T
Material/Parts:	**Equipment Conditions:**
Sealing Compound (Appendix E, item 5)	None

REMOVAL

a. Remove two screws (9) holding handle (10) to front panel (11).

b. Remove bow handle (10) and two ferrules (12).

REPAIR/REPLACEMENT

Repair of the recorder chassis is accomplished by replacement of the bow handle.

INSTALLATION

a. Apply sealing compound to screw (9) threads.

b. Position bow handle (10) and two ferrules (12) on front panel (11).

c. Install two screws (9).

65146 (1/2 page)

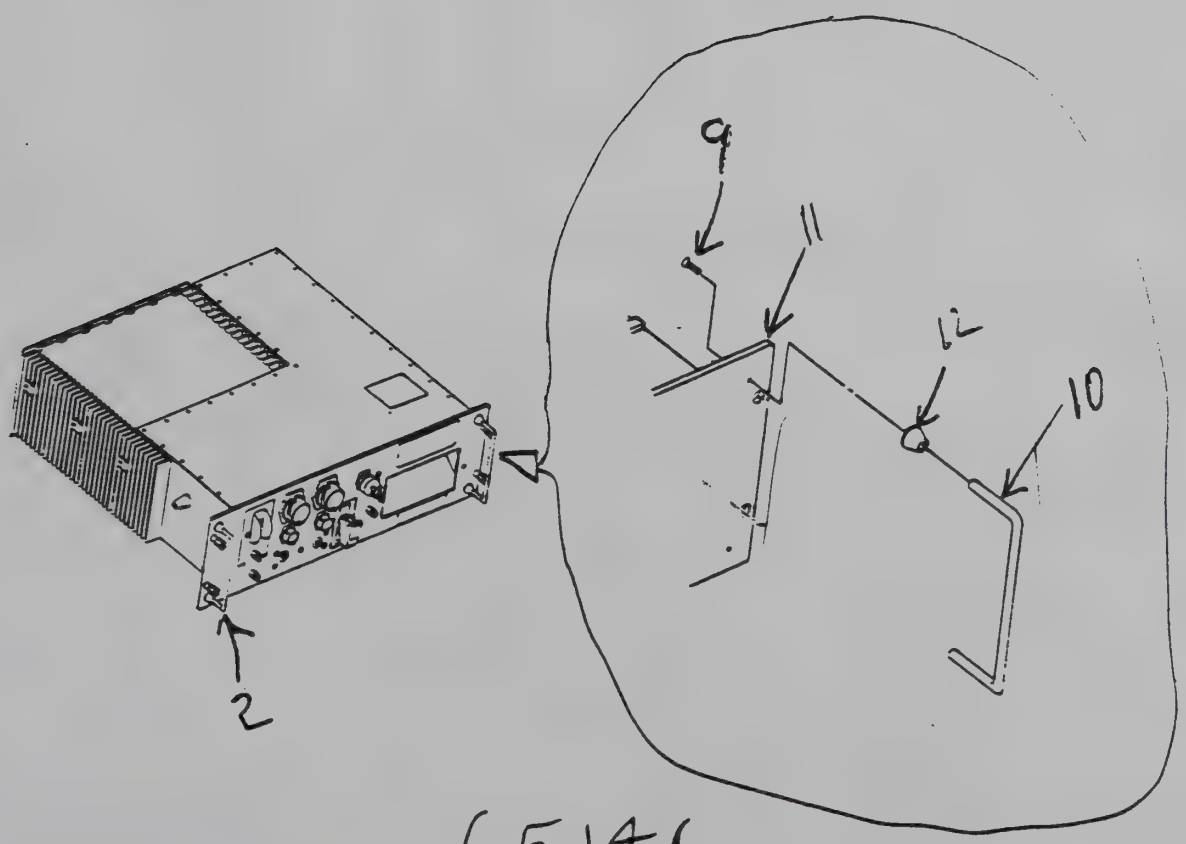

G5146
1/2 page

5-10 REPLACE CB1 GUARD.

INITIAL SETUP

Tools:
Electrical Equipment Tool Kit, TK-105/G

Personnel Required:
MOS basic 33T

Material/Parts:
None

Equipment Conditions:
None

REMOVAL

a. Remove hex nut (1) and lockwasher (2) securing switch guard (3) to chassis (4).
b. Remove switch guard (3).

REPAIR/REPLACEMENT

Repair of the recorder chassis is accomplished by replacement of the CB1 circuit breaker switch guard.

65147 (1/2 page)

INSTALLATION

a. Making sure **OFF** indicator is down, position switch guard (3) over circuit breaker CB1 toggle arm (5).
b. Secure switch guard (3) to chassis (4) using hex nut (1) and lockwasher (2).

Artist:
show locator and
bubble right side up

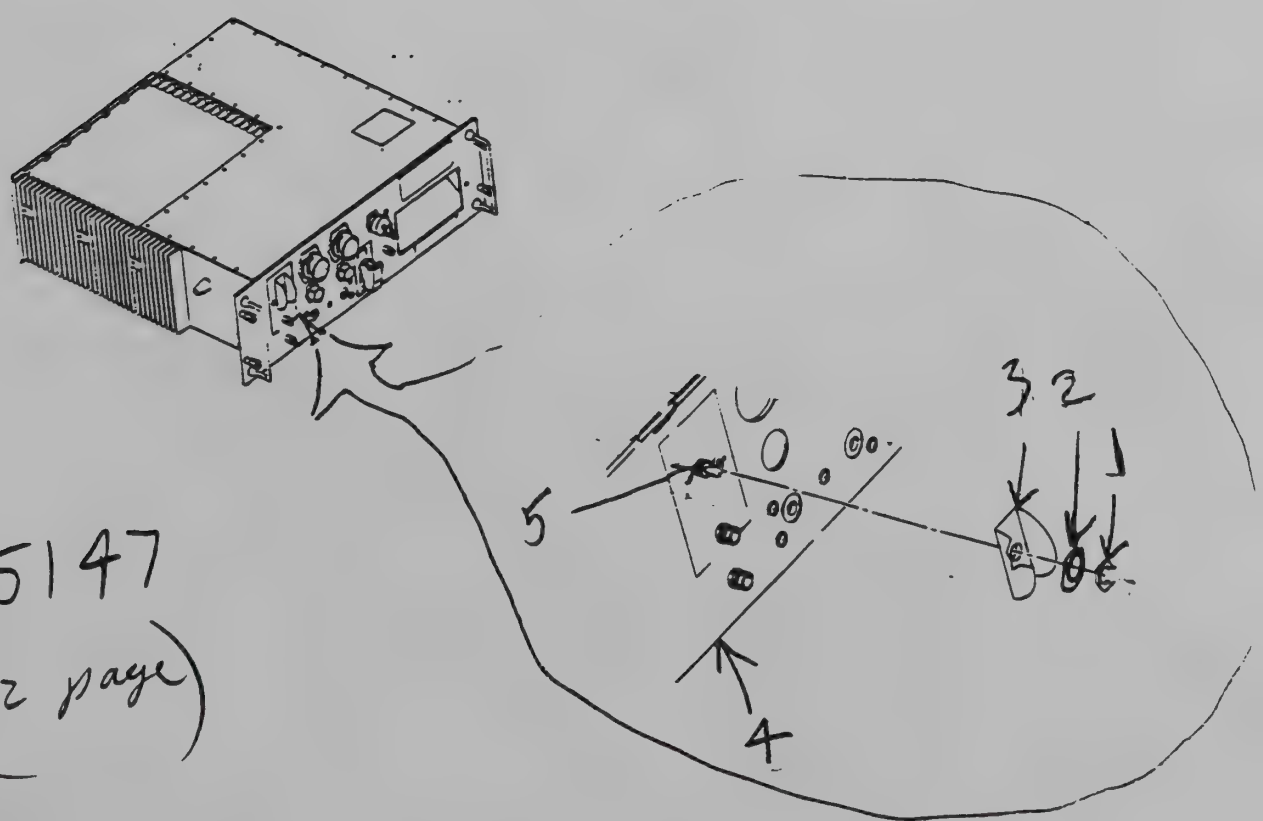

65147
(1/2 page)

5-11 REPLACE S1 GUARD.

INITIAL SETUP

Tools:
Electrical Equipment Tool Kit, TK-105/G

Personnel Required:
MOS basic 33T

Material/Parts:
None

Equipment Conditions:
None

REMOVAL

a. Hold open switch guard (6).
b. Loosen hex nut (7) securing switch S1 (8) and switch guard (6) to front panel (9).
c. Holding switch S1 (8), remove hex nut (7) and starwasher (10).
d. Remove switch guard (6).

REPAIR/REPLACEMENT

Repair of the recorder chassis is accomplished by replacement of the S1 switch guard.

INSTALLATION

a. Position switch guard (6) over switch S1 toggle arm (8).
b. Install starwasher (10) and hex nut (7).
c. While holding switch S1 toggle arm (8), tighten hex nut (7).

65148 (4 in. high)

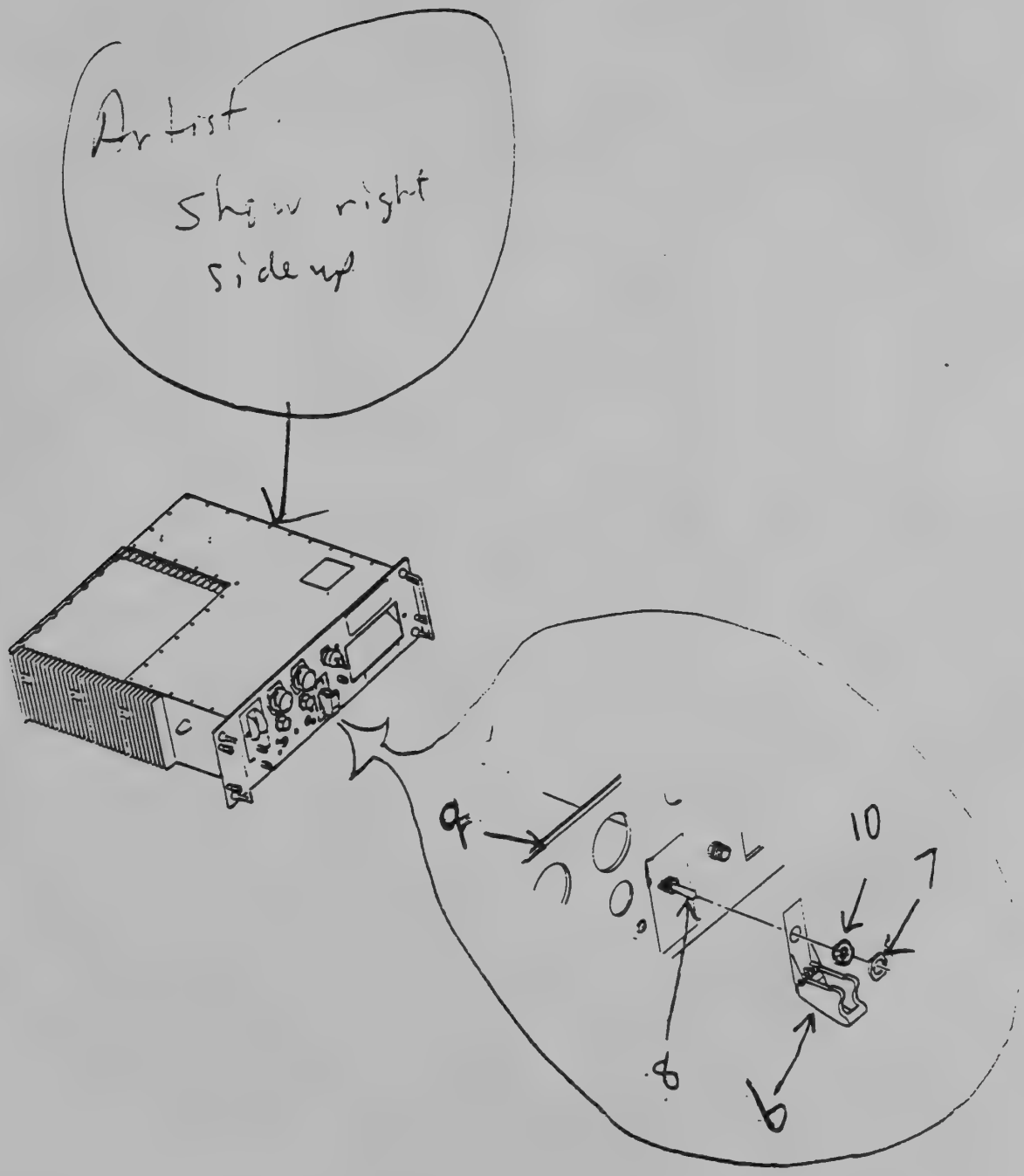

65148
4 inches high

5-12 REPLACE J1 CONNECTOR.

INITIAL SETUP

Tools:

Electrical Equipment Tool Kit, TK-105/G
Electrical Equipment Tool Kit, TK-100/G
Maintenance Kit, MK-1961/G

Personnel Required:

MOS basic 33T

Material/Parts:

Adhesive (Appendix E, item 1)

Equipment Conditions:

Bottom cover removed (paragraph 5-5)

REMOVAL

a. Remove jam nut (1) securing power connector (2) to rear panel (3).

b. As required for access, remove tiedown straps (4) securing EMI filter wiring (5) to chassis (6) and CP wiring harness (7).

c. Lift power connector (2), with connecting wiring (5) attached, out of chassis (6) two or three inches to provide access.

d. Carefully remove insulating sleeving (8) from wiring (5) leading to power connector (2).

e. Loosen two screws (9) securing strain relief (10) to EMI filter wiring (5).

f. Unscrew strain relief (10) from backshell (11) and inner and outer ground rings (12 and 13).

g. Pull shield (14) and inner and outer ground rings (12 and 13) from backshell (11).

h. Unscrew backshell (11) from power connector (2).

i. Remove pins (15) from power connector (2).

NOTE

You may be able to tell which pin(s) are bent, broken, or damaged and, therefore, only need to replace bad pins.

j. Cut bad pins (15) from EMI filter wires (16) at crimp joint.

REPAIR/REPLACEMENT

Repair of power connector can be accomplished by replacement of its pins.

65149 (full page)

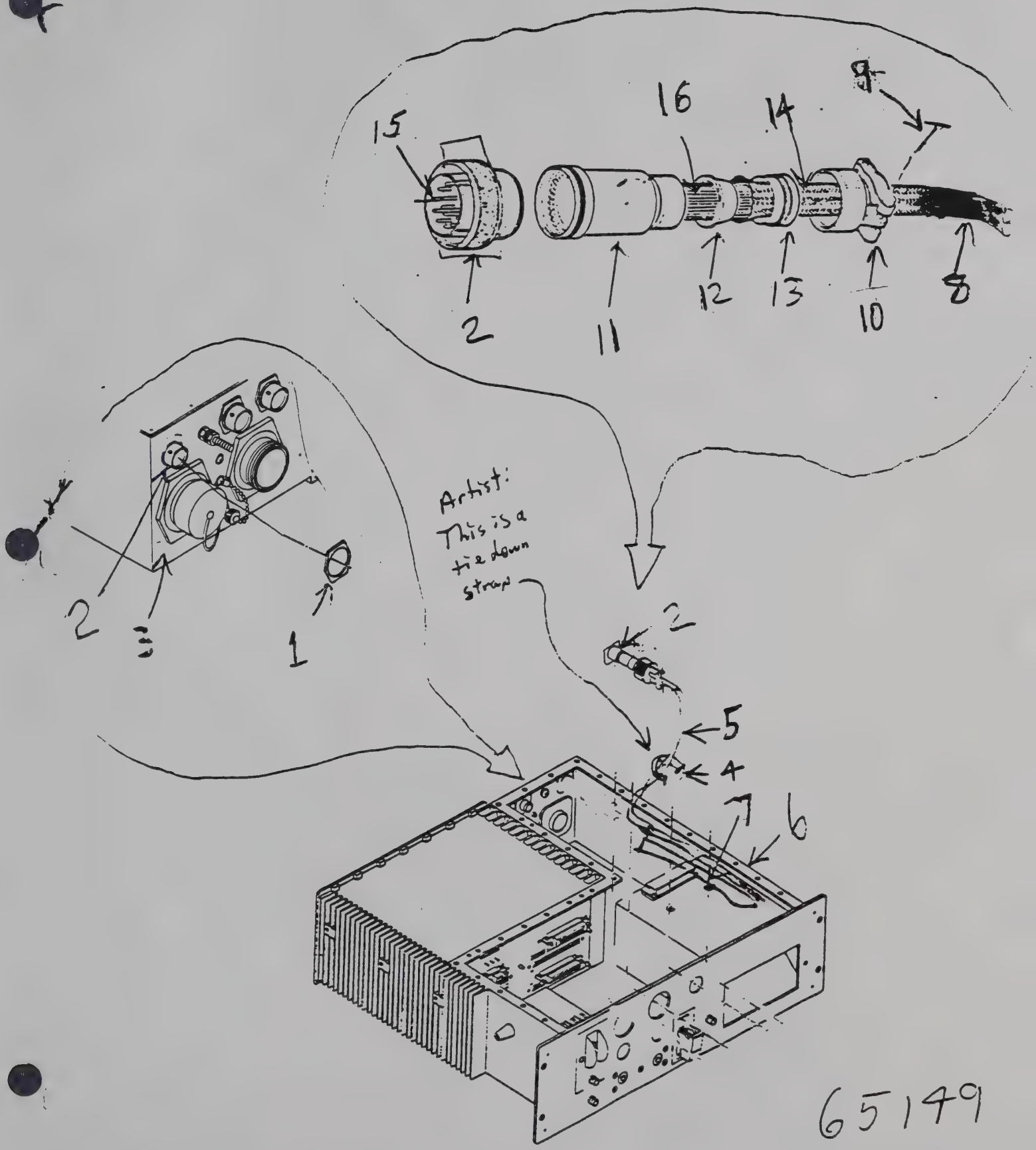

65149

full page

REPLACE J1 CONNECTOR

65161 (full page)

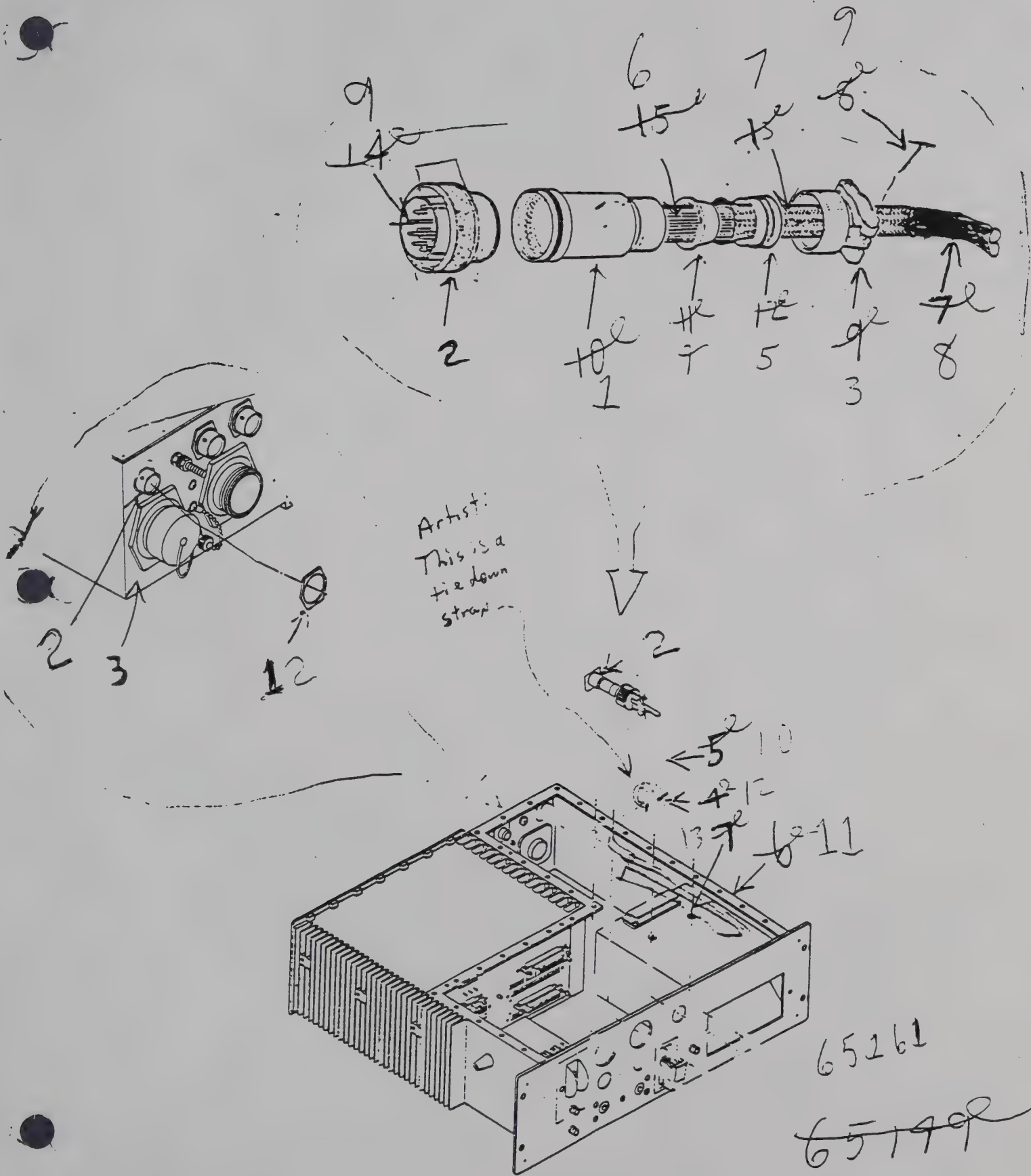
9
14
6
15
7
15
9
8
2
10
1
7
5
12
3
8
2
3
12
Artist:
This is a
tie down
strap --
2
5
10
4
11
13
11
65161
65149
Full page

INSTALLATION

a. By hand, temporarily screw connector adapter backshell (1) to power connector (2).

b. Place strain relief (3) and ground rings (4 and 5) on EMI filter wires (6); slide back from end of wires (6) so they will not interfere with subsequent steps.

c. Insert shielded EMI filter wires (6) into backshell (1) and bottom them against the connector (2). Hold wires (6) in position mark shield (7) at rear end of backshell (1).

d. Remove connector (2) from backshell (1).

e. Slide insulated sleeving (8) over EMI filter wires (6).

f. Trim shield (7) at mark made in step 3 above.

NOTE

Colors of EMI filter wires to power connector pins are as follows:

COLOR	PIN
green	a
white	b
black	c
red	d
blue	e
yellow	f

g. Crimp new pins (9) onto EMI filter wires (6).

h. Position pins (9) in connector (1). Assemble backshell (1) to power connector (2).

i. Slide inner ground ring (4) into backshell (1) and bottom it out.

j. Flare shield (7) over tapered end of inner ground ring (4) and gently force wiring (6) toward power connector (2) until shield (7) covers taper of ground ring (4).

k. Insert outer ground ring (5) into backshell (1) over shield (7).

l. Shrink insulated sleeving (8).

m. Attach strain relief (3) to backshell (1).

n. Tighten screws (9) to secure strain relief (3) onto shielded EMI filter wires (10).

o. Position power connector (2) and connecting wiring (10) into chassis (11).

p. Install jam nut (12) securing power connector (2) to chassis (11).

q. If removed, install tiedown straps (12) as required to secure FL1 wiring (10) to chassis (11) and CP wire harness (13).

r. Install bottom cover (refer to paragraph 5-5).

s. Run BIT (refer to paragraphs 2-6.2 Power-Up and 2-6.3 Restart)or perform RRSS operation tasks exhibiting original symptom(s) to verify repair.

5-13 REPLACE CIRCUIT BREAKER CB1.

INITIAL SETUP

Tools:
Electrical Equipment Tool Kit, TK-105/G

Personnel Required:
MOS basic 33T

Material/Parts:
None

Equipment Conditions:
Bottom cover removed (paragraph 5-5)

REMOVAL

a. Remove CB1 guard (refer to paragraph 5-10).
b. Remove two screws (2), lockwashers (6), and flatwashers (7) securing circuit breaker (4) to chassis (8).
c. Carefully slide circuit breaker (4) out of chassis (8) mounting hole.
d. Tag six wires (1) connected to circuit breaker (4).
e. Remove screws (2) securing terminal lugs (3) of six wires (1) to circuit breaker (4).
f. Remove circuit breaker (4).

65150(1/2 page)

Artist:

show recorder assembled, except for exploded parts and bottom cover.

Is OK to make recorder proportionally smaller than exploded parts for clarity.

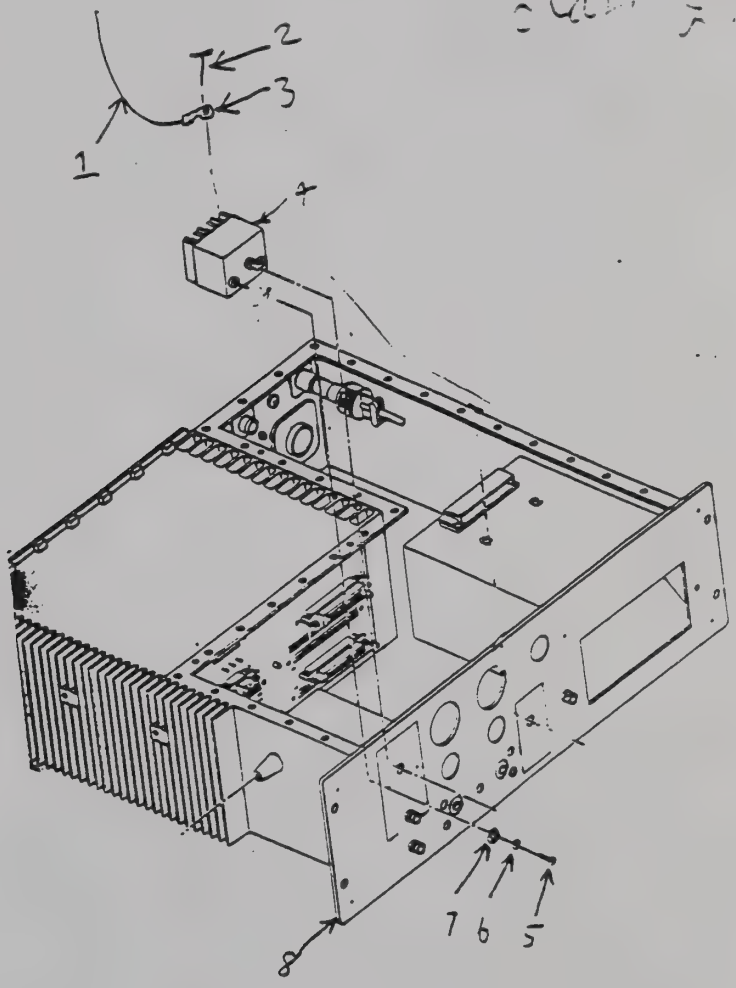

65150

1/2 page

REPAIR/REPLACEMENT

Repair of the recorder is accomplished by replacement of circuit breaker CB1.

INSTALLATION

a. Install screws (2) through terminal lugs (3) of 6 wires (1) and secure lugs (3) to circuit breaker (4) as tagged.

b. Position circuit breaker (4) in chassis (8) front panel mounting hole.

c. Install 2 screws (5), lockwashers (6), and flatwashers (7) securing circuit breaker (4) to chassis (8).

d. Install CB1 guard (refer to paragraph 5-10).

e. Install bottom cover (refer to paragraph 5-5).

f. Run BIT (refer to paragraphs 2-6.2 Power-Up and 2-6.3 Restart)or perform RRSS operation tasks exhibiting original symptom(s) to verify repair.

5-14 REPLACE MEMORY INTERFACE GROUP.

INITIAL SETUP

Tools:

Electrical Equipment Tool Kit, TK-105/G
General Mechanics Tool Kit SC 5180-90-CL-N05

Personnel Required:

MOS basic 33T

Material/Parts:

None

Equipment Conditions:

Bottom cover removed (paragraph 5-5)
RMA removed (paragraph 4-6)

REMOVAL

NOTE

The MIG (Memory Interface Group) comprises: a power cable, ribbon cable, mounting plate assembly (MPA), MPA Option-Configuration Plug Assembly (OPCA), chassis latch fork, and chassis latch shim pack. Because the parts are installed in different locations in the recorder chassis, the chassis latch fork and shim pack are shipped loose and replaced separately from the MPA portion of the MIG. The MIG interfaces between the recorder chassis and electronics and the RMA.

CAUTION

Be careful not to damage MPA EMI gaskets; electromagnetic leakage may result.

NOTE

It may not be necessary to replace all the MIG hardware items, such as the fork and the shim pack, if they are in good condition and the other components, such as the RMA and MPA, mate properly.

CAUTION

The recorder should always be right side up when removing or replacing the RMA so the hard disk insulator will support and guide the RMA; otherwise damage to the RMA could result.

NOTE

Learn the feel of a properly adjusted RMA-to-recorder fit (proper chassis latch adjustment). Remove and install RMA in a known good recorder and note amount of pressure required to close and latch RMA handle. This will aid in determining correct RMA fit after replacing the MIG.

a. Remove four screws (1) and flatwashers (2) securing hard disk insulator (3) to chassis (4). Remove and retain hard disk insulator (3).

b. Disconnect MIG ribbon cable connector (5) from motherboard (6) connector J3 (7).

c. Loosen two screws (8) securing MIG power harness connector (9) to motherboard (6) at connector J4 (10).

d. Loosen two screws (11) securing MIG power harness connector (12) to MPA (13) and remove MIG power harness (14).

e. Depress tab (15) on cable tie down base (16) securing MIG ribbon cable (17) to chassis, lift clip, (18) and remove ribbon cable (17).

f. Disconnect MIG ribbon cable connector (18) from MPA(13) and remove ribbon cable (17).

65151 full page

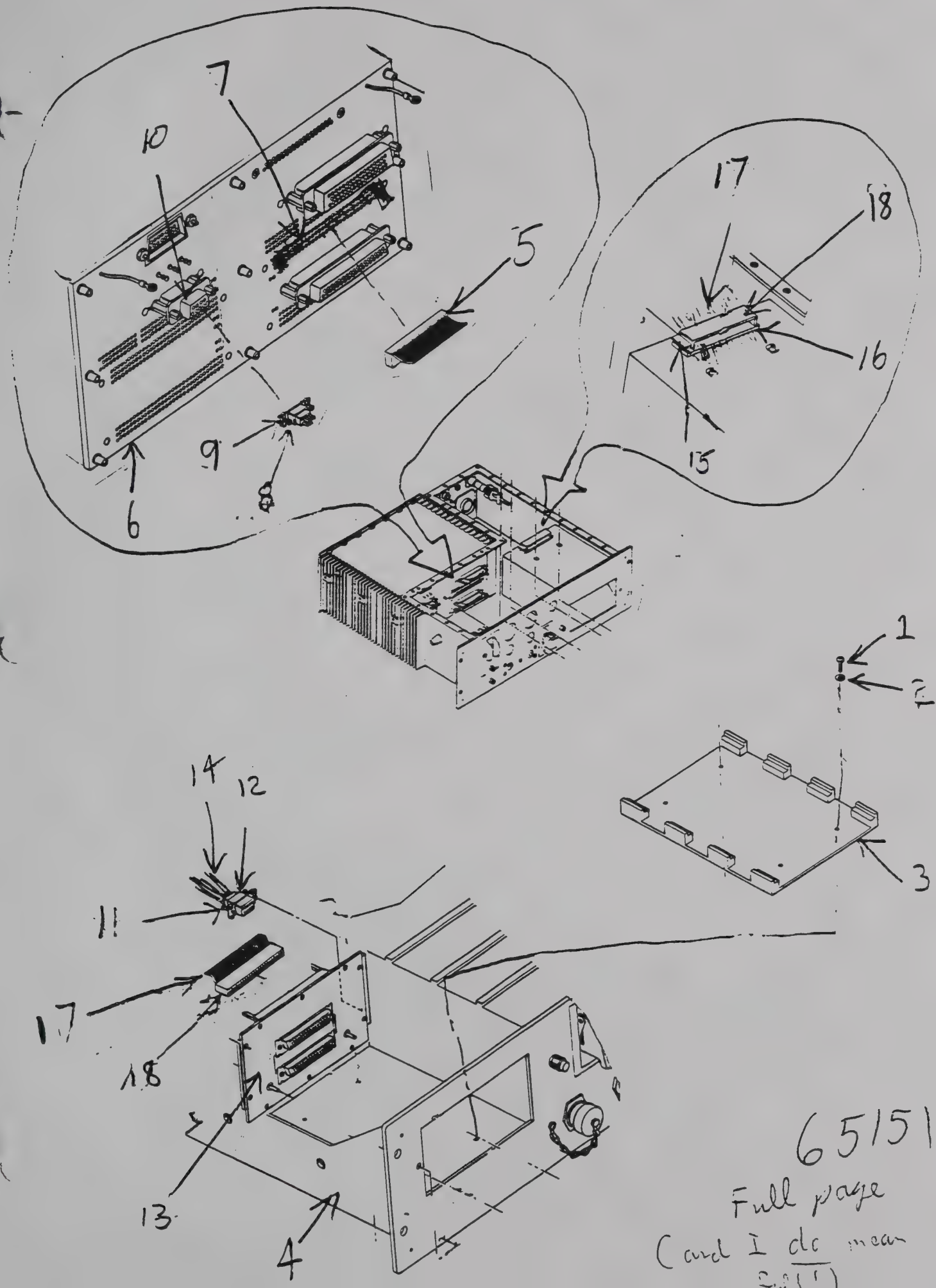

65151

Full page

(and I do mean
full)

65152 (full page)

Artist: item 5 is flex cable (see writer)

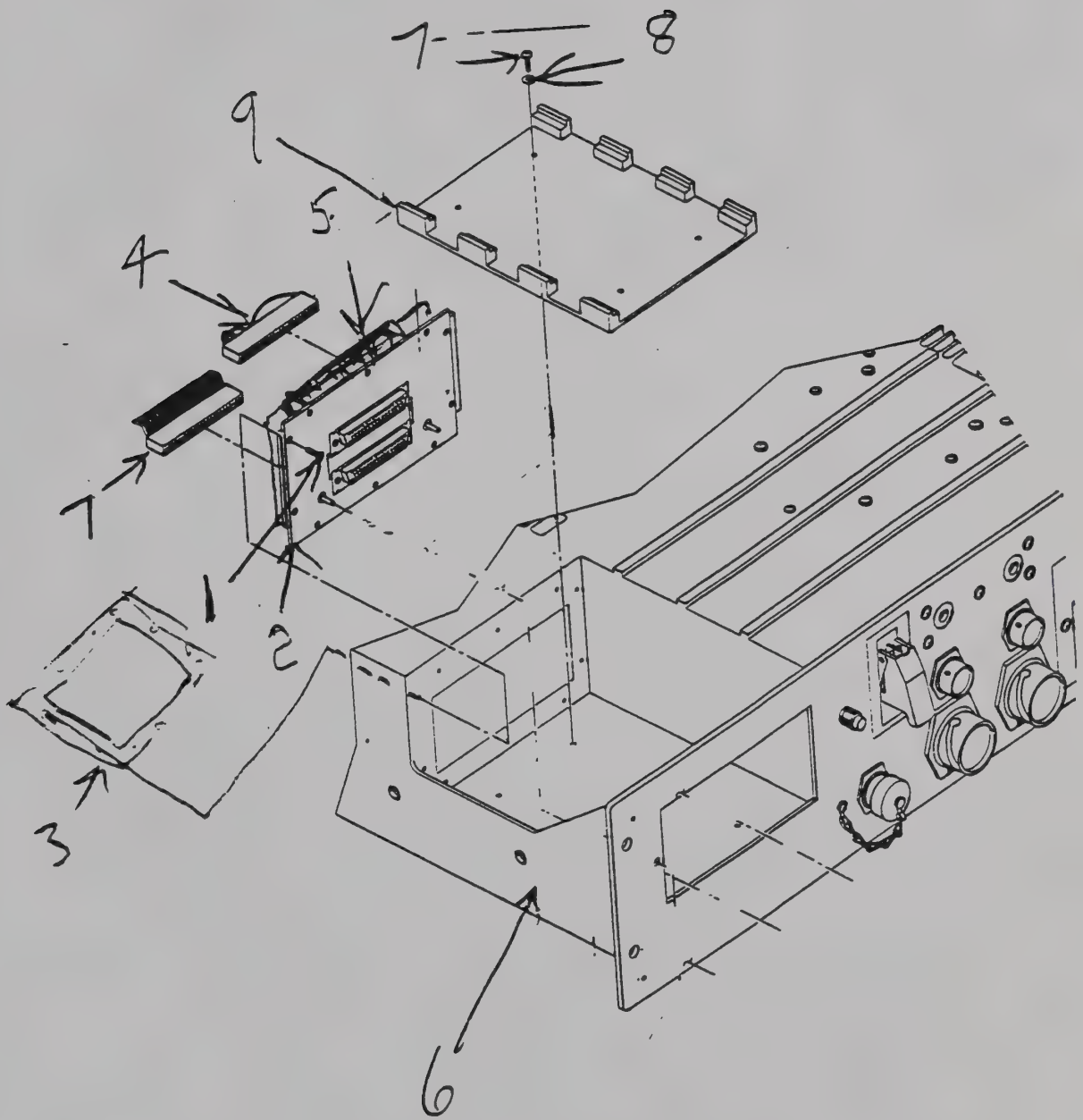

65152

full page

CAUTION

If necessary, cover connectors and replace the bottom recorder cover, holding it on with a few screws, to prevent damage or contamination.

g. Carefully turn unit on right side.

h. From front of recorder, through MPA cavity, remove ten screws (1) securing MPA (2) to nut plate (3).

i. Remove OCPA (4).

NOTE

If a new OCPA is not included with the new MPA or MIG, retain the old OCPA..

j. By hand, compress MPA flex cables (5) and remove MPA (2) from recorder chassis (6), with MPA electronics portion coming out through chassis opening and RMA cavity, to the front of the recorder. Pull the top of the MPA out first.

REPAIR/REPLACEMENT

Repair of the recorder is accomplished by replacement of the MIG.

INSTALLATION

a. Install MPA

(1) If nut plate (3) has moved or slipped down during MPA removal, position nut plate (3) around MPA chassis opening.

(2) If applicable, disconnect ribbon cable (7) from MPA (2).

(3) By hand, carefully place MPA (2) into recorder, pushing MPA electronics portion through chassis (6) opening and nut plate (3) from the front. Align MPA in opening and push in, evenly compressing both flex circuits (5).

(4) If no new OCPA (4) was furnished, install OCPA (4)on MPA (2).

(5) Orient nut plate (3) holes to align with holes in MPA (2). Install, but do not tighten, ten screws (1) securing MPA (2) to nut plate (3), so MPA (3) can move vertically and horizontally. Put diagonal corner screws in first to ease installation.

(6) Carefully lay unit flat into normal operating position.

(7) Install but do not tighten four screws (7) and flatwashers (8) securing hard disk insulator (9) to chassis (6).

REPLACE MEMORY INTERFACE GROUP

65153(full page)

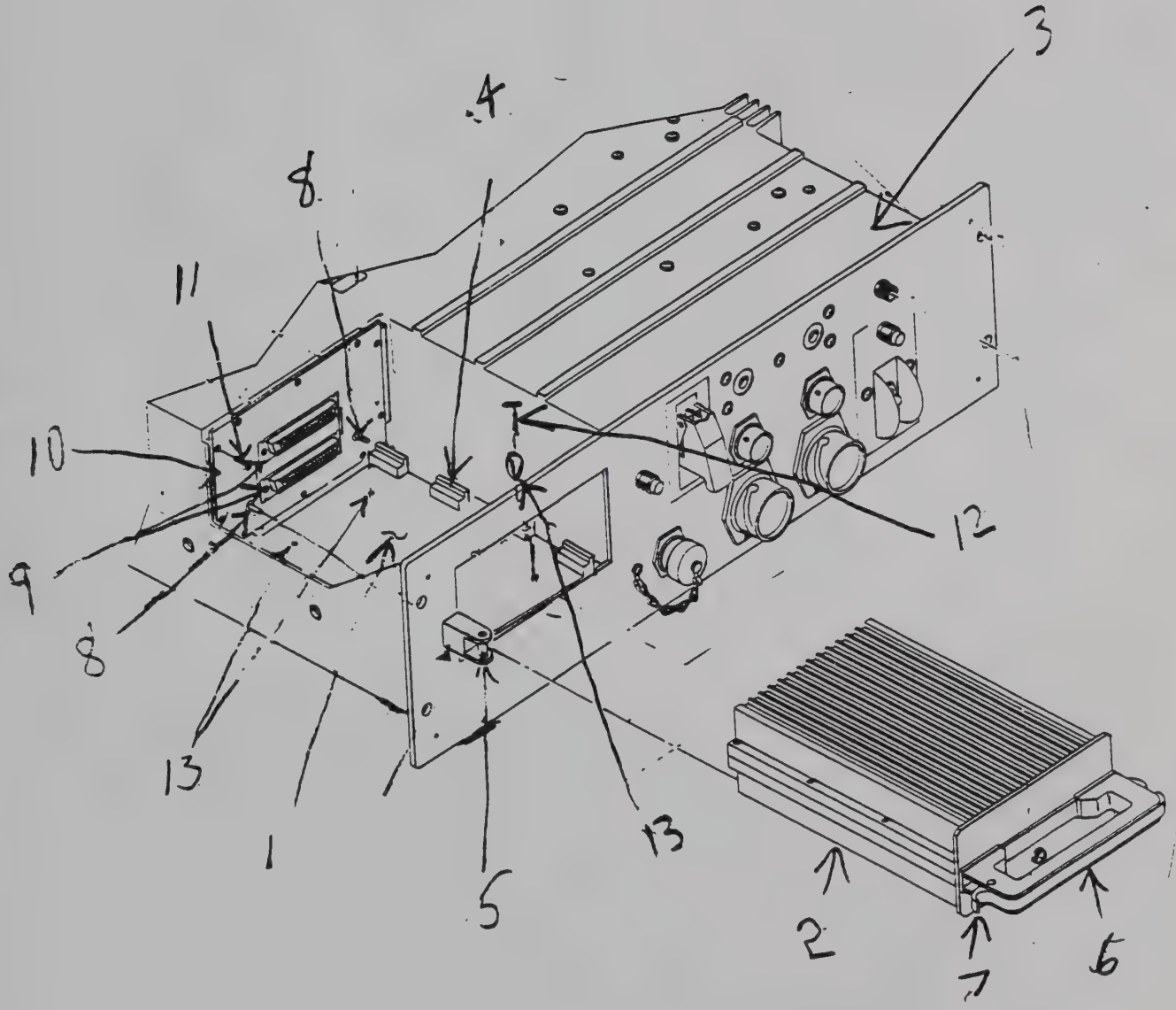

65153
full page

CAUTION

The recorder should always be right side up when removing or replacing the RMA so the hard disk insulator will support and guide the RMA; otherwise the RMA could be damaged.

NOTE

Some adjustment of the hard disk insulator (1) alignment is possible because of the slack in the mounting holes.

(8) Carefully slide RMA (2) into recorder chassis (3); make sure RMA stays in hard disk insulator (1) guides (4). Push RMA in until you can engage fork pin (5) with RMA handle (6) latch (7), but do not apply pressure with the handle leverage.

CAUTION

Be careful when moving recorder with RMA not fully locked in place. Connectors can be damaged by moving the recorder before proper RMA alignment.

(9) Carefully tip recorder up on its side, keeping RMA (2) from coming out of the hard disk insulator guides (4).

(10) While observing rear of RMA (2) and its mating with MPA guide pins (8) and connectors (9), gently try closing and locking the RMA latch handle (6), making sure RMA correctly mates with MPA guide pins (8) and connectors (9).

CAUTION

Do not apply excessive force. The force required to latch the handle should be moderate. If there is no excessive binding, gently close and lock the RMA latch handle.

(11) Carefully tip recorder back down so its bottom is exposed.

(12) Adjust MPA (10) so RMA (2) is perpendicular to it and aligns with guide pins (8).

(13) Tighten top five of ten screws (11) securing MPA (10) to chassis (3).

(14) Remove RMA (2).

(15) Remove hard disk insulator (1).

(16) Set recorder on right side. Tighten remaining screws (11) securing MPA (10) to chassis (3).

b. Install hard disk insulator.

(1) Lay recorder flat in operating position. Install, but do not tighten, four screws (12) and flatwashers (13) securing hard disk insulator (1) to chassis (3).

(2) Carefully slide RMA (2) into chassis (3). Close and lock handle (6).

(3) Adjust hard disk insulator (1) so RMA (2) does not bind when its connectors mate with MPA connectors (9).

(4) Partially remove RMA (2) until two screws (13) in hard disk insulator (1) are exposed. Tighten screws (13) and ensure RMA/hard disk insulator mating is non-binding.

(5) Remove RMA and tighten remaining two screws (12) securing hard disk insulator (1) to chassis (3).

c. Check MIG chassis latch adjustment is correct for MIG:

(1) Place a .001-.002 in. feeler gage (1) on outer side surface of EMI gasket (2) so it will be between EMI gasket and RMA (3) when RMA is installed.

(2) Install and latch RMA.

(3) Pull feeler gage from between EMI gasket and RMA. There should be some resistance or drag as feeler gage is pulled. Adjust chassis latch fork (refer to step j, sub step 2 below) if there is no resistance or if there is excessive force required when feeler gage is pulled.

(4) Repeat feeler gage check (steps 1, 2, and 3 above) for top and opposite side surfaces of EMI gasket (2).

65154 (1/2 page)

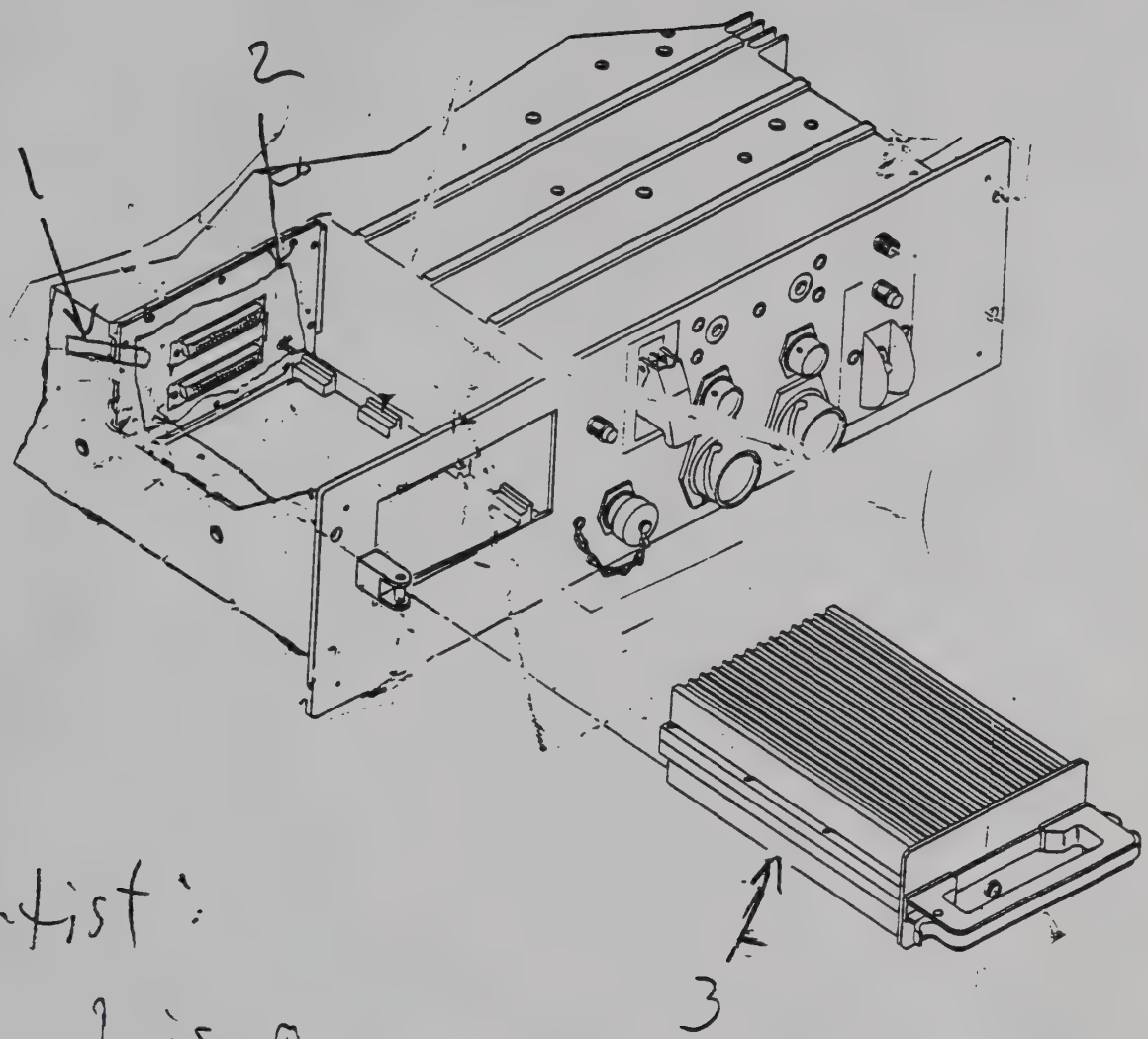

Artist:

Item 1 is a common automotive Feeler gage. Item 2 is the MPA EMI gasket (you know?)

Any questions ask Stephen Eichelberger (you know!)

65154

1/2 page

65155 (1/2 page)

d. Turn unit upside down.

e. Bend and shape new ribbon cable (4) as shown.

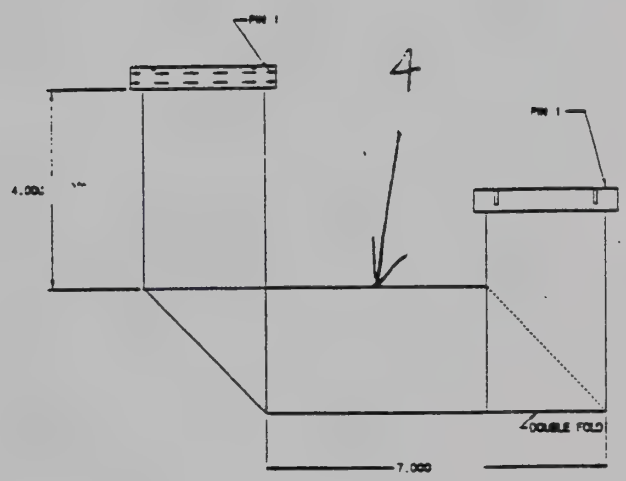

65155

1/2 page

f. Place MIG ribbon cable (1) in chassis on cable tie down base (2). Close clip (3) to secure MIG ribbon cable (1) to chassis.

g. Connect MIG ribbon cable connector (4) to motherboard (5) connector J3 (6).

h. Connect MIG ribbon connector (7) to MPA (8).

i. Connect MIG power cable connector (9) to motherboard (5) connector J4 (10) and tighten two screws (11).

j. If not attached, connect MIG power cable connector (12) to MPA (8) and tighten two screws (13).

k. Replace bottom cover (refer to paragraph 5-5).

65156 (full page)

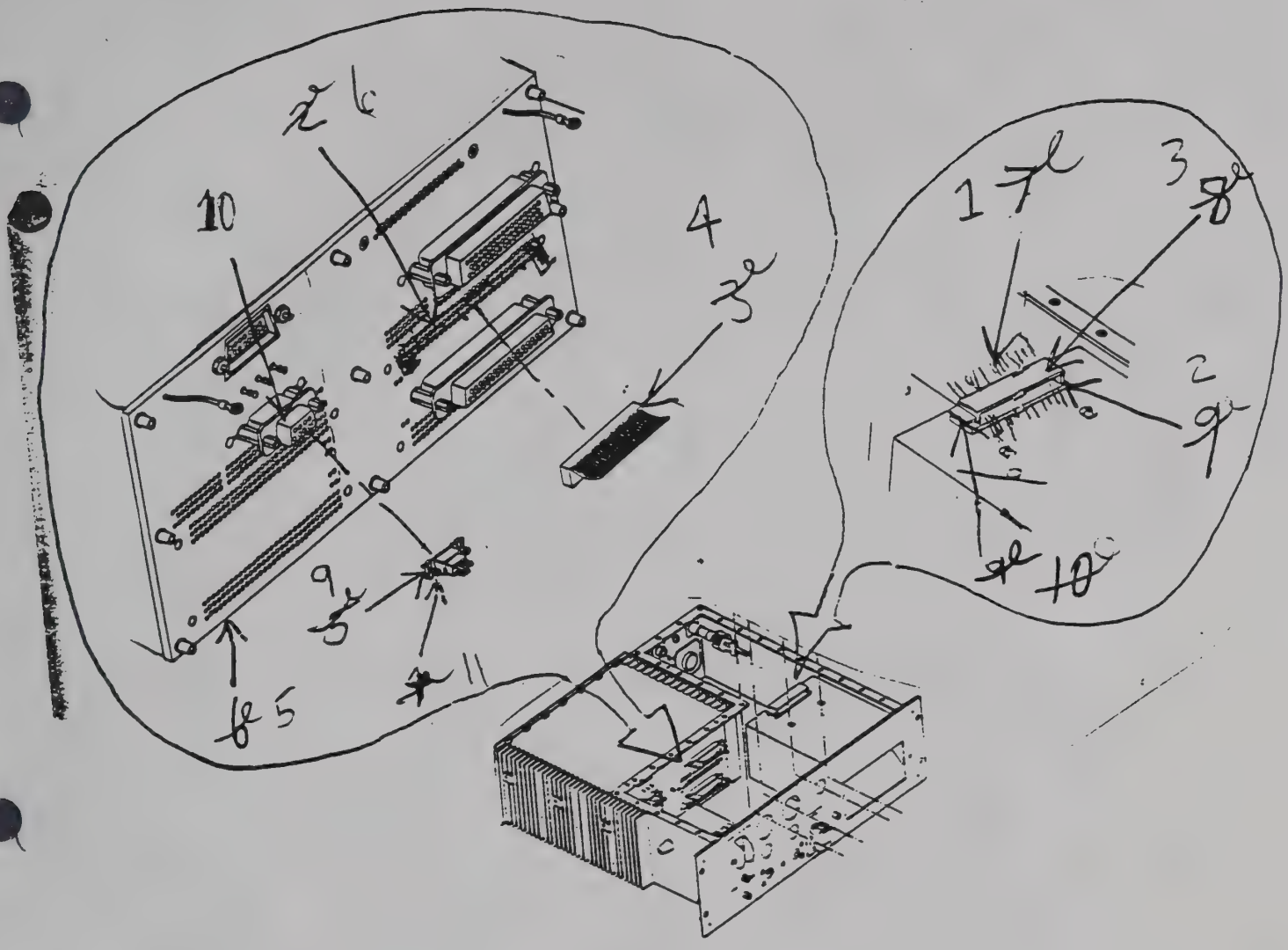

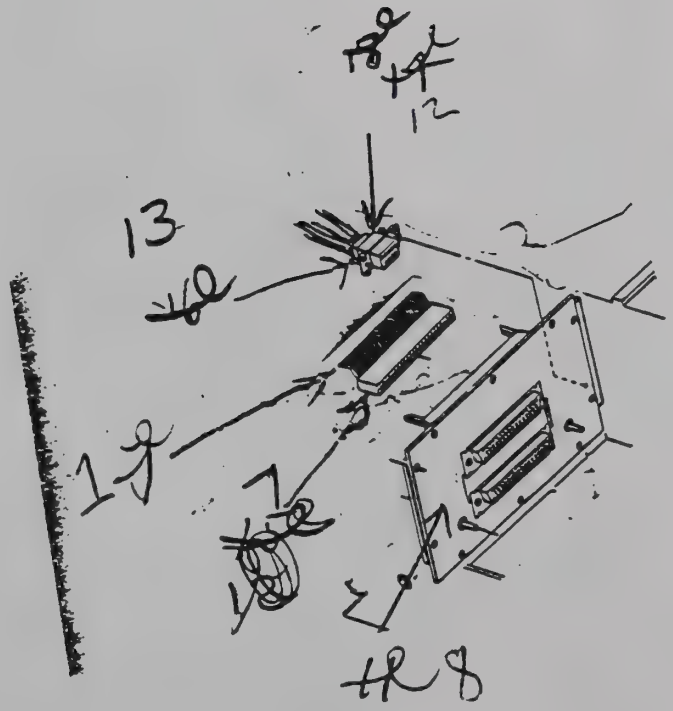

65156

Full page

l. If required, replace MIG chassis latch fork

(1) Removal

(a) Remove socket head screw (1), lockwasher (2), and flatwasher (3) securing fork (4) to recorder front panel (5).

(b) Remove fork (4) and, if present, shim(s) (6).

(2) Installation

(a) Place two new MIG .080 inch chassis latch shims (6) between fork (4) and recorder front panel (5).

(b) Install fork (4) and shims (6) to front panel (5) with socket head screw (1), lockwasher (2), and flatwasher (3).

(3) Adjust chassis latch fork

(a) Slide RMA (7) into chassis and carefully attempt to close and lock handle (8). Do not use excessive force. If latch is too tight, remove chassis latch fork (step (1) above) and add layered shims (6) until RMA (7) can be installed without excessive force on handle (8).

[b] Reinstall latch fork (4).

(c) Disengage RMA handle (8) and slide RMA (7) out slightly.

(d) Place a .001-.002 in. feeler gage (9) on outer side surface of EMI gasket (10) between gasket (10) and RMA (7). Latch RMA (7).

(e) Pull feeler gage (9) from between EMI gasket (10) and RMA (7). On a properly adjusted latch fork (4), there will be some resistance (drag) as feeler gage (9) is pulled. If there is no resistance on feeler gage, remove fork (step (1) above)) and remove one shim (6) layer. If there is excessive force required when feeler gage (9) is pulled, remove fork (step (1) above) and install one shim pack (6) layer.

(f) Reinstall fork (step (2) above).

(g) Repeat feeler gage (9) check for top and opposite side surfaces of EMI gasket (10). Adjust shim pack (6) as required until there is slight resistance when feeler gage is pulled.

(h) Install latch fork (reference step (2) (b)).

k. Run BIT (refer to paragraphs 2-6.2 Power-Up and 2-6.3 Restart)or perform RRSS operation tasks exhibiting original symptom(s) to verify repair.

65160 (full page)

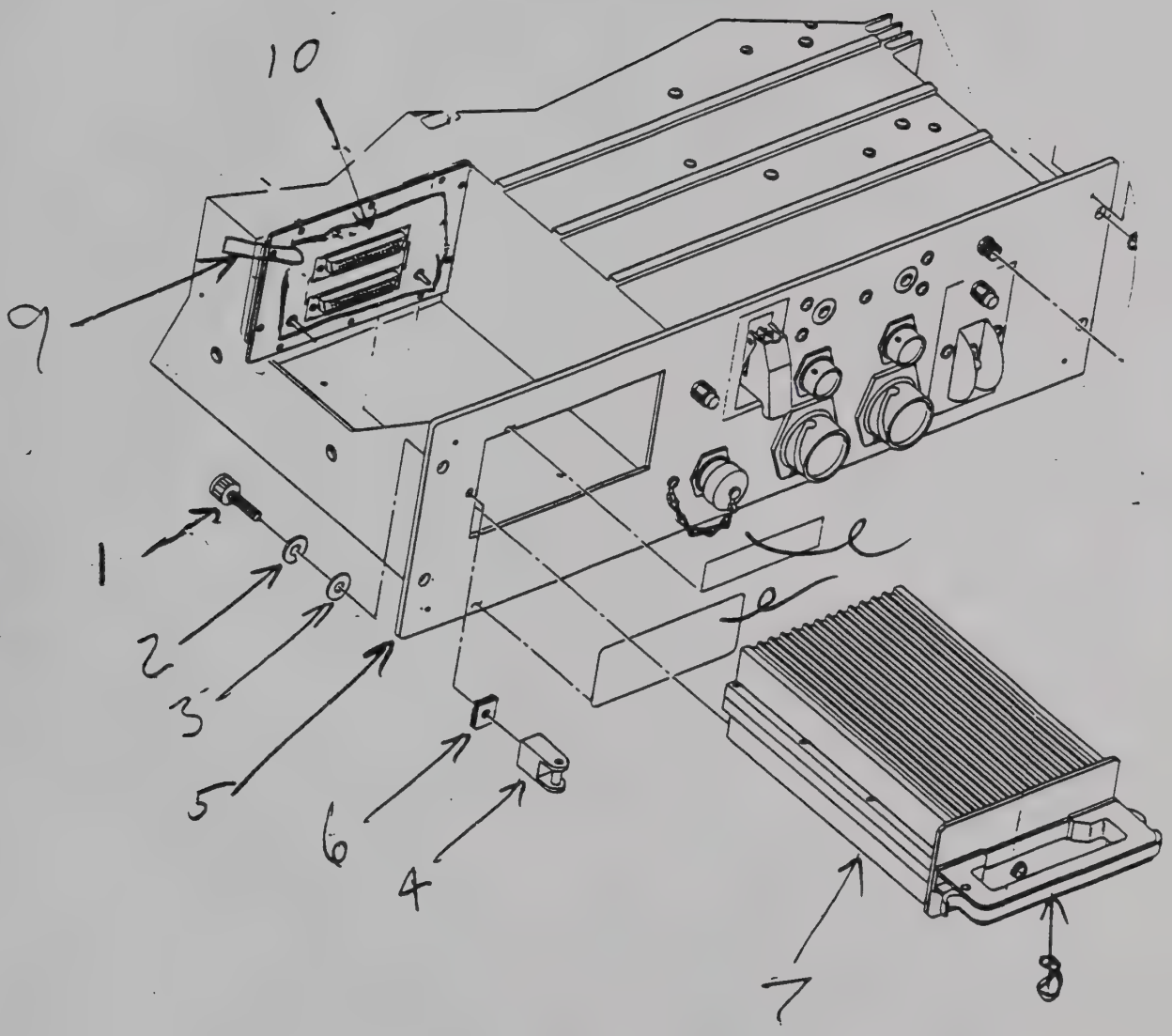

65160

full page

5-15 REPLACE AUDIO EMI FILTER.

INITIAL SETUP

Tools:

Electrical Equipment Tool Kit, TK-105/G
Electrical Equipment Tool Kit, TK-100/G
Maintenance Kit, MK-1961/G

Material/Parts:

Lead-Tin Solder (Appendix E, item 8)

Personnel Required:

MOS basic 33T

Equipment Conditions:

Bottom cover removed (paragraph 5-5)

REMOVAL

a. Remove tiewrap (1) securing CP wiring harness (2) to chassis (3).

b Move CP wire harness (2), at the J10 and J13 ends, out of the way.

c. Remove tiewrap (4) holding audio wire harness (5) to chassis (3), next to audio EMI filter (6).

d. Remove five screws (7), lockwashers (8), and flatwashers (9) securing the audio EMI filter (6) to front panel (10). Lift audio EMI filter up and out to gain access to audio EMI filter ground nut (11).

e. Remove ground nut (11) at center of audio EMI filter and disconnect audio wire harness wire W1T2 (12) and CP wire harness wires W2T1, W2T2, and W2T4 (13).

f. Remove screw (14), lockwasher (15), and flatwasher (16) securing audio wire harness clamp (17) to audio EMI filter (6). Remove clamp (17).

g. Tag 8 audio wire harness wires (18) connected to audio EMI filter (6). Unsolder and disconnect 8 audio wire harness wires (18) from audio EMI filter (6).

h. Remove audio EMI filter.

65162(full page)

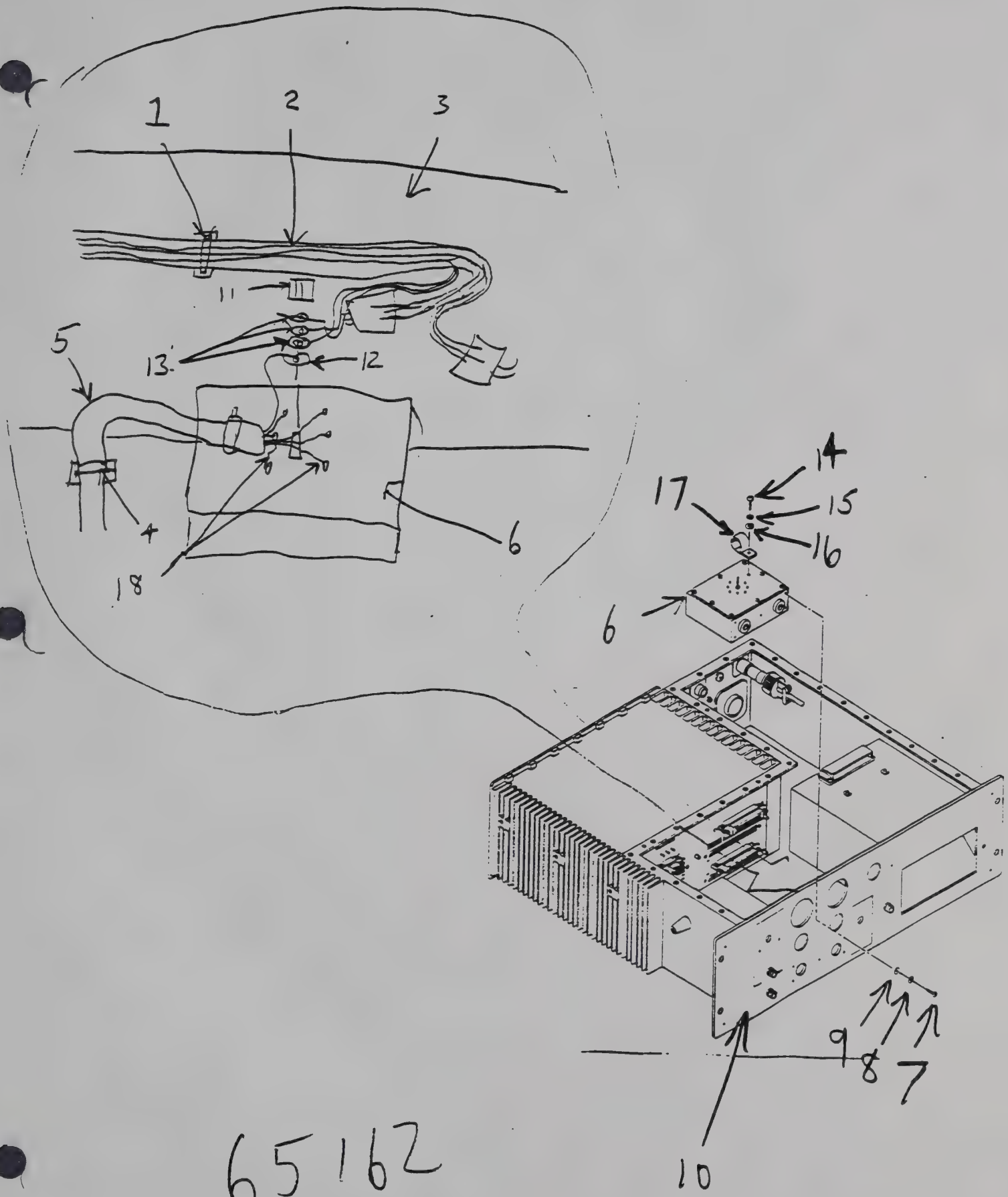

65162

Full page

65163 (full page

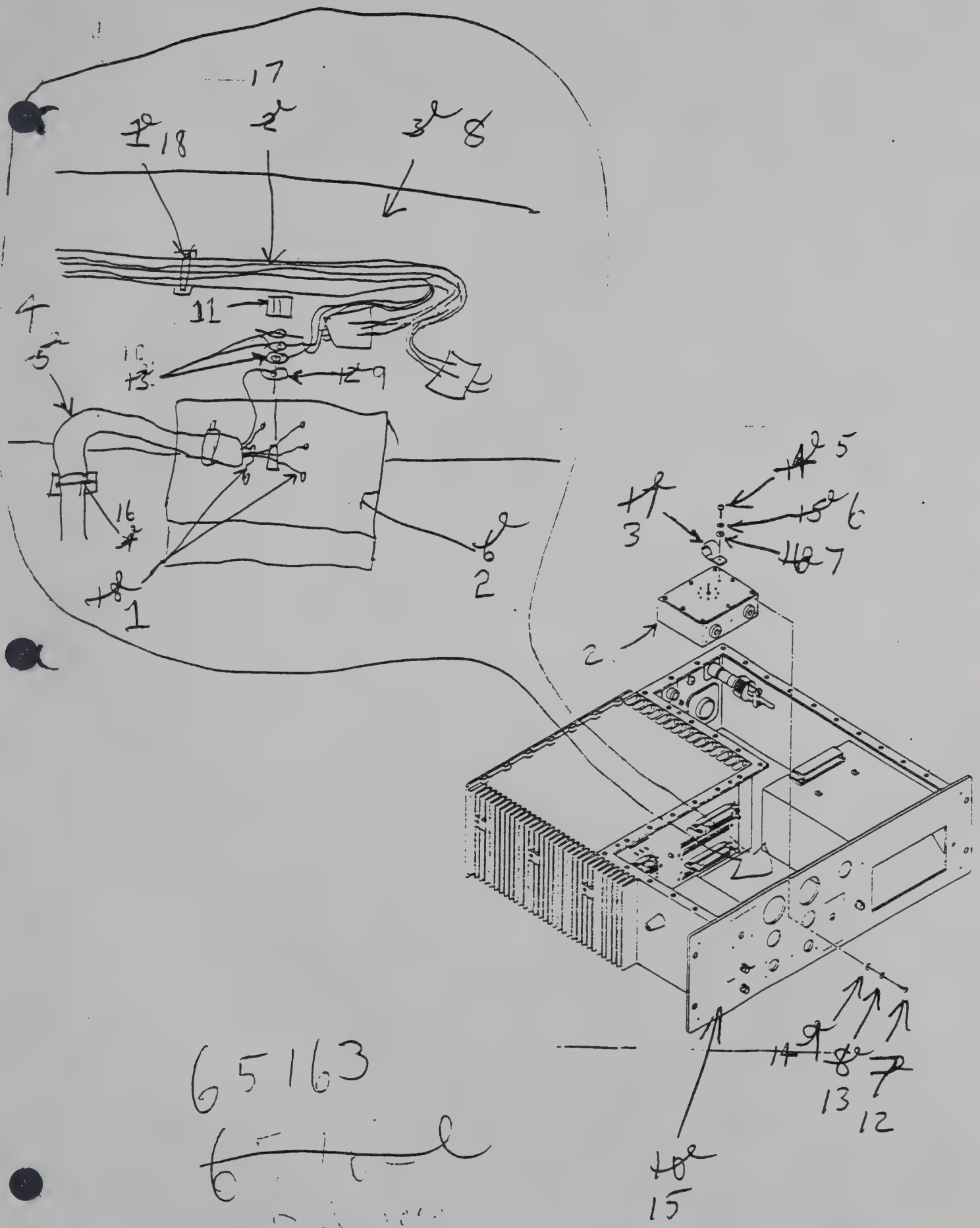

65163

REPAIR/REPLACEMENT

Repair of the recorder is accomplished by replacement of the audio EMI filter.

INSTALLATION

a. Connect and solder 8 audio wire harness wires (1) to audio EMI filter (2).

b. Position clamp (3) securing audio harness (4) to audio EMI filter (2) and install screw (5), lockwasher (6), and flatwasher (7).

c. Carefully place audio EMI filter (2) into position within recorder chassis (8).

NOTE

Make sure post on Audio EMI filter is not loose before attaching ground wires.

d. Connect ground wires W1T2 (9), W2T1 (10), W2T2 (10) and W2T4 (10) to audio EMI filter (2) and install ground nut (11).

e. Install five screws (12), lockwashers (13), and flatwashers (14) securing audio EMI filter (2) to front panel (15).

f. Install tiewrap (16) securing audio wire harness (4) to chassis (8).

g. Move CP wire harness (17), at J10 and J13 ends, back into place.

h. Install tiewrap (18) securing CP wire harness (17) to chassis (8).

i. Install bottom cover (refer to paragraph 5-5).

5-16 REPLACE MOTHERBOARD CCA.

INITIAL SETUP

Tools:

Electrical Equipment Tool Kit, TK-105/G
Electrical Equipment Tool Kit, TK-100/G

Personnel Required:

MOS basic 33T

Material/Parts:

None

Equipment Conditions:

Bottom cover removed (paragraph 5-5)
Card cage cover removed (paragraph 5-6)
Audio CCA removed (paragraph 5-18)
CP CCA removed (paragraph 5-19)

REMOVAL

CAUTION

CCAs are electrostatic sensitive; use special handling and processing (ESD class 1) to prevent damage from electrostatic discharge transients.

NOTE

The motherboard includes the power wire harness assembly, which goes to the power EMI filter and CB1.

a. Remove power supply module (refer to paragraph 5-20).

b. Loosen two screws (1) securing MIG power cable connector (2) to motherboard connector J4 (3); disconnect MIG power cable connector (2).

c. Remove four screws (4), lockwashers (5), and flatwashers (6) securing EMI filter protective cover (7) to standoffs (8). Remove and retain the cover (7).

d. Remove two nuts (9), lockwashers (10), starwashers (11), and screws (12) securing motherboard ground wires (13) to chassis grounds E4 and E5.

e. Loosen two screws (14) securing CP wiring harness W2 connector (15) to motherboard connector J2 (16); disconnect W2 connector (15).

f. Open latches on ribbon cable motherboard connector J3 (17) and disconnect ribbon cable connector (18).

g. Loosen two screws (19) securing audio wiring harness W1 connector (20) to motherboard connector J1; (21) disconnect W1 connector (20).

h. Remove circuit breaker CB1 (refer to paragraph 5-13).

i. Remove five terminal nuts (22) securing motherboard power cable W3 leads (23) to power EMI filter (24).

j. Remove nine screws (25), lockwashers (26), and flatwashers (27), securing motherboard (28) to chassis (29).

k. Carefully remove motherboard (28).

REPAIR/REPLACEMENT

Repair of the recorder is accomplished by replacement of the motherboard.

65164 (full page)

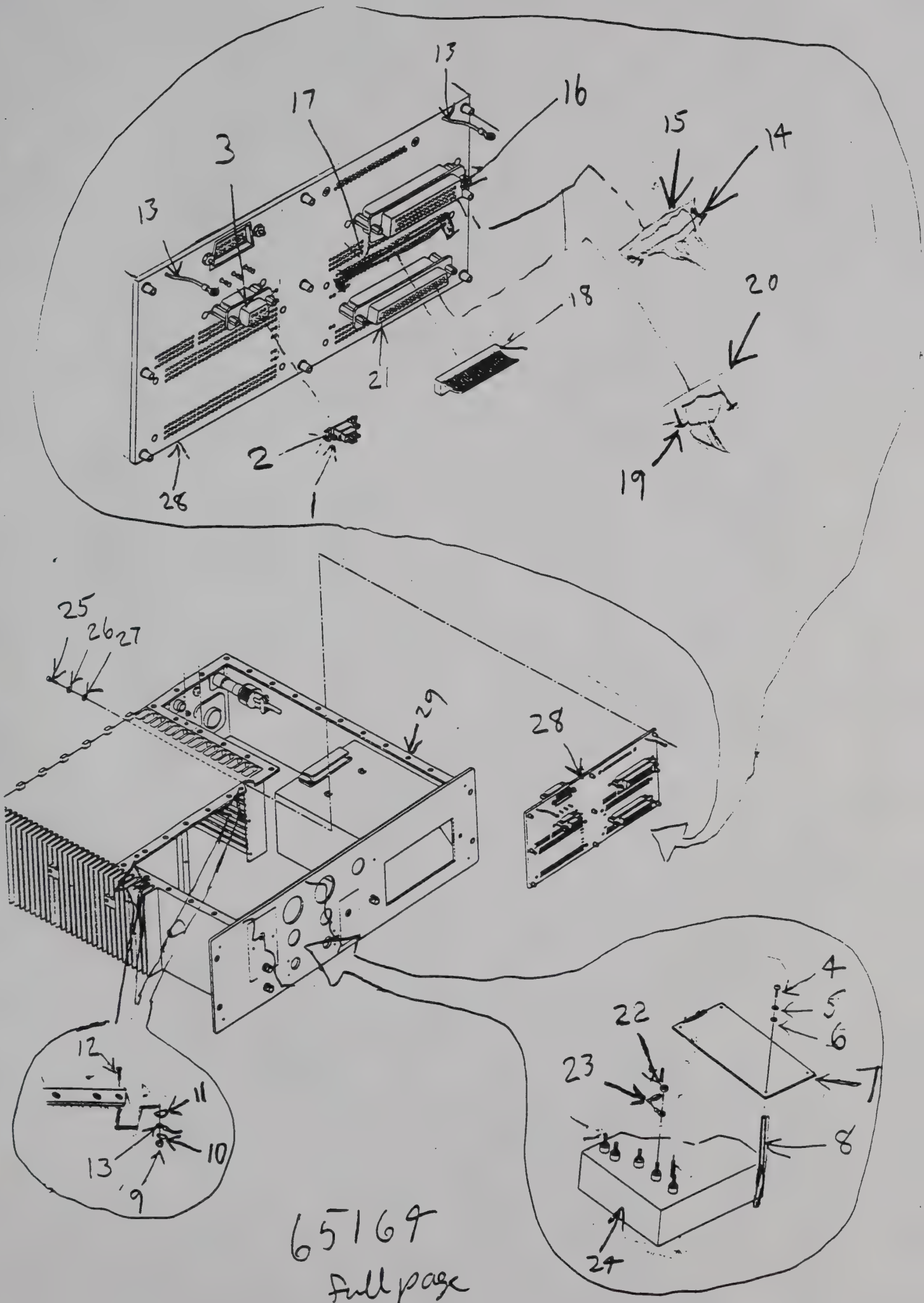

65164

full page

REPLACE MOTHERBOARD CCA

INSTALLATION

a. Carefully position motherboard (1) in chassis (2).

b. Install but do not tighten nine screws (3), lockwashers (4), and flatwashers (5), securing motherboard (1) to chassis (2). A socket head key may be used to ease insertion of screws (3).

65165 (2.75 high)

c. Insert audio circuit card assembly (6) in slot marked A2, and seat to motherboard (1)to help in motherboard alignment.

d. Tighten four accessible screws (3), of the nine screws installed in step b above.

e. Insert power supply PS1 (7) into chassis slot marked PS1, and seat to motherboard (1)to check motherboard alignment. If motherboard is misaligned, remove power supply (7), loosen four screws (3), and realign motherboard.

f. Repeat steps d and e until motherboard is properly aligned; then tighten four screws (3).

g. Slide audio circuit assembly (6) out of chassis (2).

h. Tighten five remaining screws (3), securing motherboard (1) to chassis (2).

65166 (2.75 high)

i. Install five terminal nuts (8) securing wires (9) to power EMI filter (10).

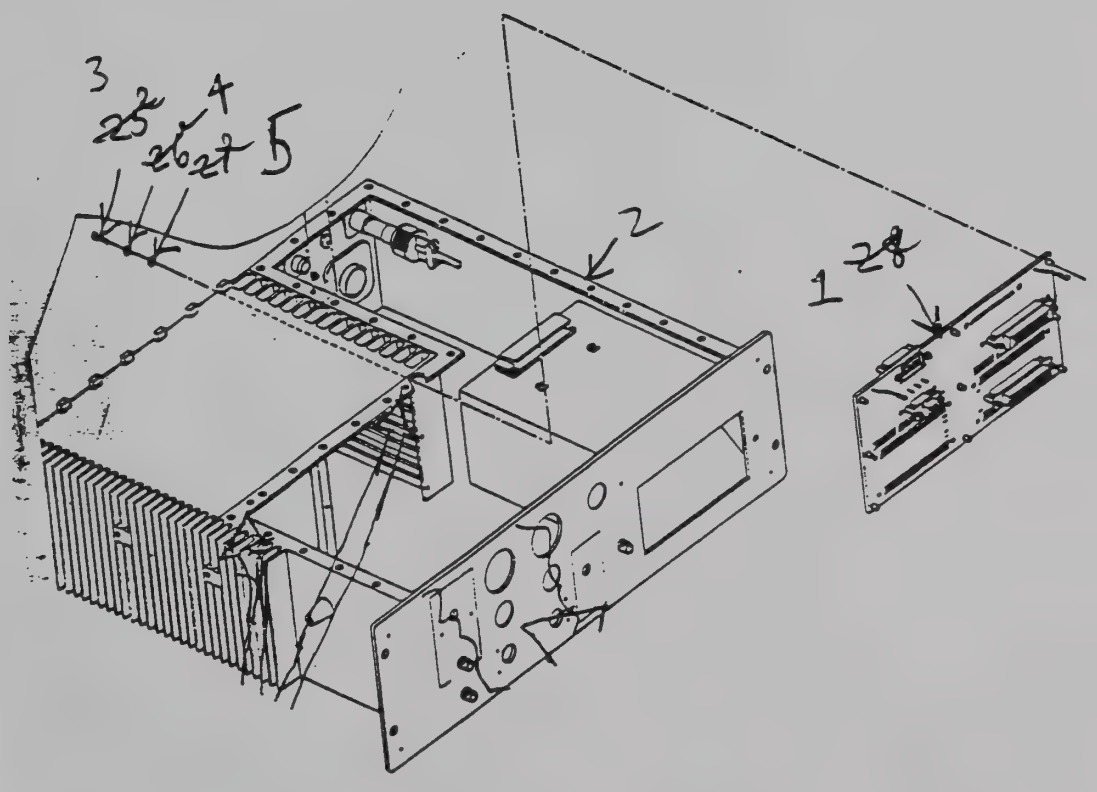

65165

2.75 in high

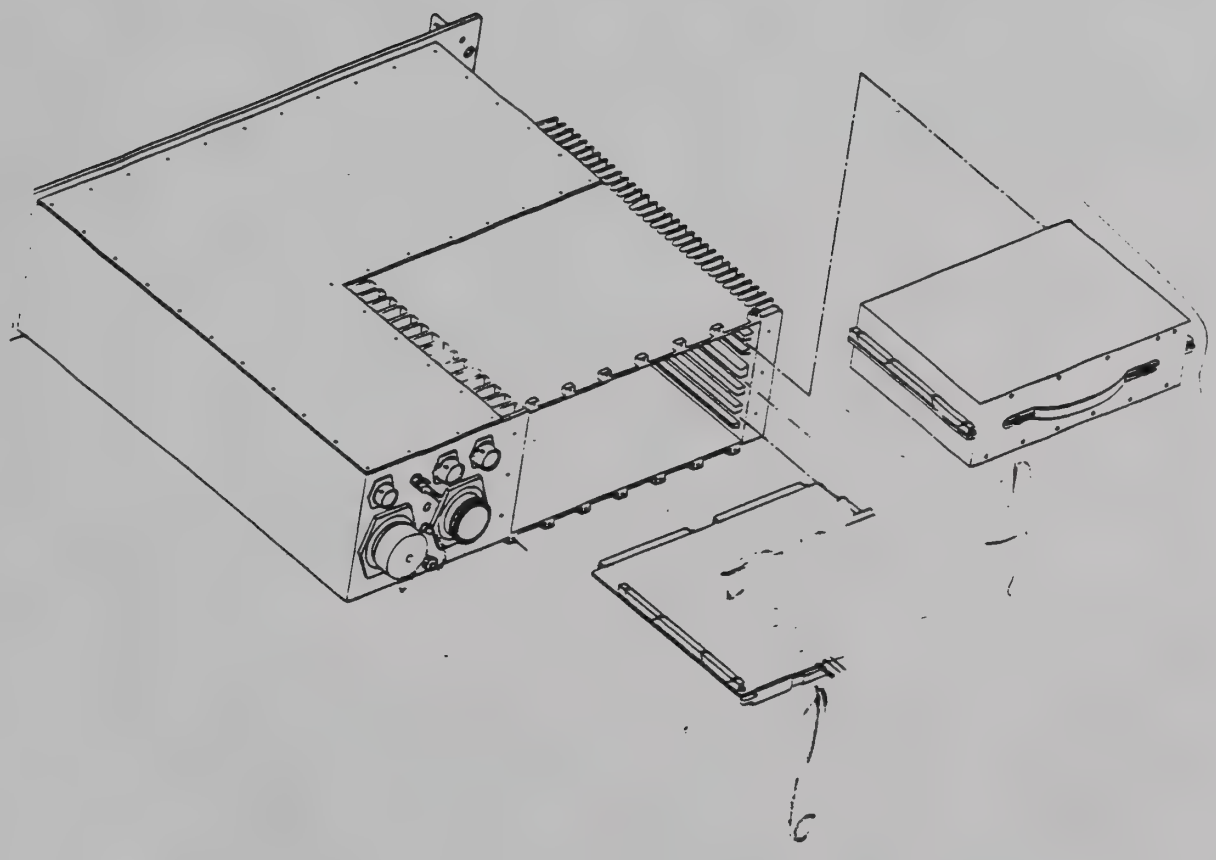

65166

2.75 in high

j. Install power supply module (refer to paragraph 5-20).

k. Position audio wiring harness W1 connector (11) to motherboard connector J1 (12) and tighten two screws (13).

l. Position SCSI cable connector (14) to motherboard J3 (15) and secure by closing connector latches (16).

m. Position CP wiring harness W2 connector (17) to motherboard connector J2 (18) and tighten two screws (19).

n. Carefully position unit on its side to ease installation of ground hardware. Install two screws (20), starwashers (21), lockwashers (22), and nuts (23) securing motherboard ground wires (24) to chassis at E4 and E5.

o. Move EMI safety shield (25) into place and install four screws (26), flatwashers (27), and lockwashers (28) securing shield (25) to standoffs (29).

p. Position MIG power cable connector (30) to motherboard connector J4 (31) and tighten two screws (32)

65167 (6 in high)

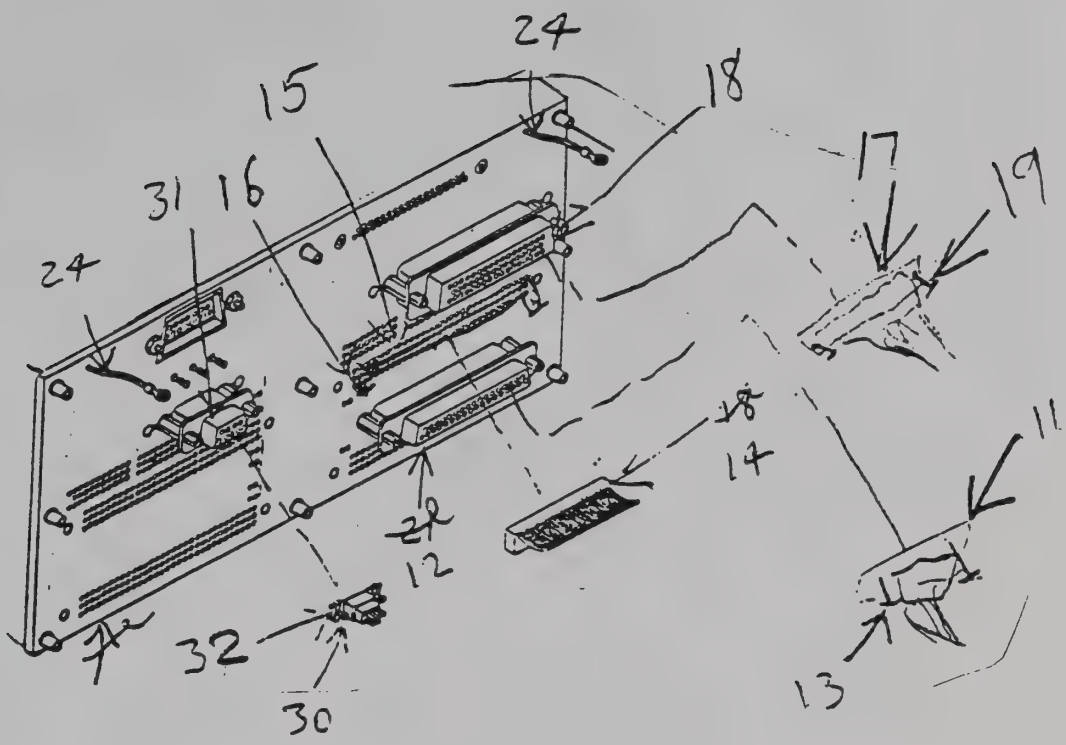

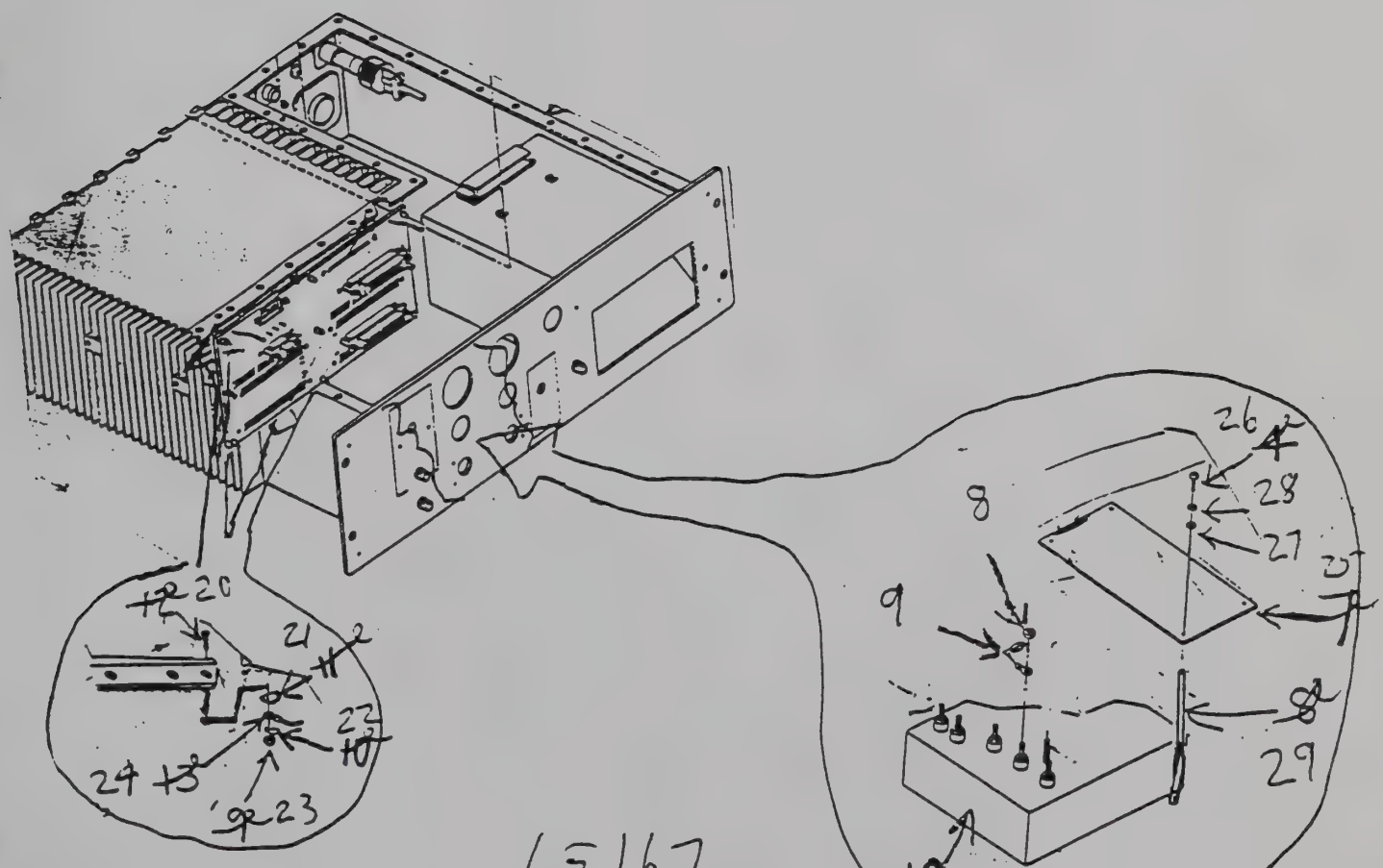

65167

~~6~~ 6

~~5.7~~ in. high

q. Install power supply module (refer to paragraph 5-20).

r. Install CP CCA (refer to paragraph 5-19).

s. Install audio CCA (refer to paragraph 5-18).

t. Install bottom cover (refer to paragraph 5-5).

u. Install card cage cover (refer to paragraph 5-6).

5-17 REPAIR MOTHERBOARD CCA.

INITIAL SETUP

Tools:

Select tools from appropriate tool kit.

Material/Parts:

Adhesive (Appendix E, item 1)
Electrical Insulating Compound (Appendix E, item 3)
Adhesive Primer (Appendix E, item 4)
Lead-Tin Solder (Appendix E, item 6)
Sealing Compound (Appendix E, item 5)

Personnel Required:

MOS basic 33T

Equipment Conditions:

Motherboard removed from recorder.

REPAIR/REPLACEMENT

Repair of the motherboard is accomplished by replacement of parts coded for Direct Support listed in the Repair Parts and Special tools List (Appendix C)

NOTE

The motherboard includes a power wire harness assembly branched to CB1 and the power EMI filter.

NOTE

Use common shop practice to accomplish any repair which available time, skills, tools, and spare parts allow. If the motherboard cannot be restored to operation with simple repair, then repair is beyond the capability of intermediate level maintenance and is to be discarded.

Use common shop practice to remove defective parts. Note order of steps taken to remove defective parts and replace by reversing steps. Use common shop practice to unsolder, solder, etc.

Physically examine motherboard after replacing defective parts to ensure successful repair. Check continuity of repaired wires and connections (refer to Motherboard Wiring Diagram FO 12).

5-18 REPLACE AUDIO CCA

INITIAL SETUP

Tools:
Electrical Equipment Tool Kit, TK-105/G

Personnel Required:
MOS basic 33T

Material/Parts:
None

Equipment Conditions:
Card cage cover removed (paragraph 5-6)

REMOVAL

CAUTION

CCAs are electrostatic sensitive; use special handling and processing (ESD class 1) to prevent damage from electrostatic discharge transients.

a. Turn unit upside down to facilitate proper positioning of tools and wedge locks.
b. Loosen two socket head screws (1) securing circuit card (2) to chassis (3).
c. Grasp circuit card ejectors (4) and pull out to eject circuit card (2).
d. Carefully slide circuit card from chassis.

65168
(5 in
high)

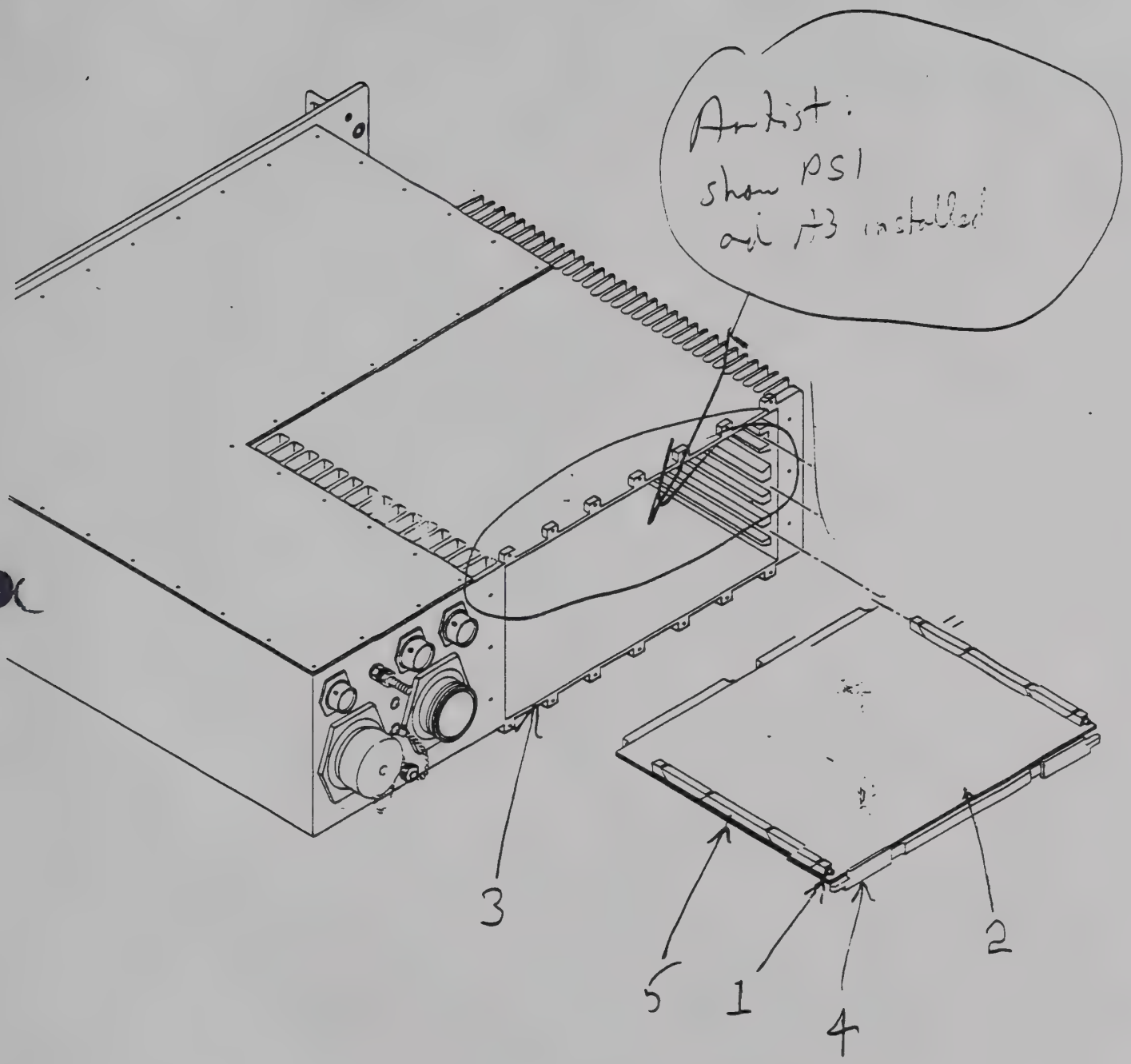

65168

5 in. high

REPAIR/REPLACEMENT

Repair of the recorder is accomplished by replacement of the circuit card.

INSTALLATION

a. Carefully slide circuit card (2) into chassis (3) slot marked A2.

b. Push circuit card ejectors (4) to firmly seat circuit card into motherboard.

CAUTION

Avoid over tightening wedlock socket head screws. Damage to the mechanism could result. Do not over tighten or under tighten.

c. Tighten two socket head screws (1) securing circuit card (2) to chassis (3). Carefully tighten wedge locks (5) snugly to ensure thermal conductivity.

d. Install card cage cover (refer to paragraph 5-6)

5-19 REPLACE CP CCA.

INITIAL SETUP

Tools:
Electrical Equipment Tool Kit, TK-105/G

Personnel Required:
MOS basic 33T

Material/Parts:
None

Equipment Conditions:
Card cage cover removed (paragraph 5-6)

REMOVAL

CAUTION

CCAs are electrostatic sensitive; use special handling and processing (ESD class 1) to prevent damage from electrostatic discharge transients.

a. Turn unit upside down to facilitate proper positioning of tools and wedge locks.
b. Loosen two socket head screws (1) securing circuit card (2) to chassis (3).
c. Grasp circuit card ejectors (4) and pull out to eject circuit card (2).
d. Carefully slide circuit card (2) from chassis (3).

65169 (5 in high)

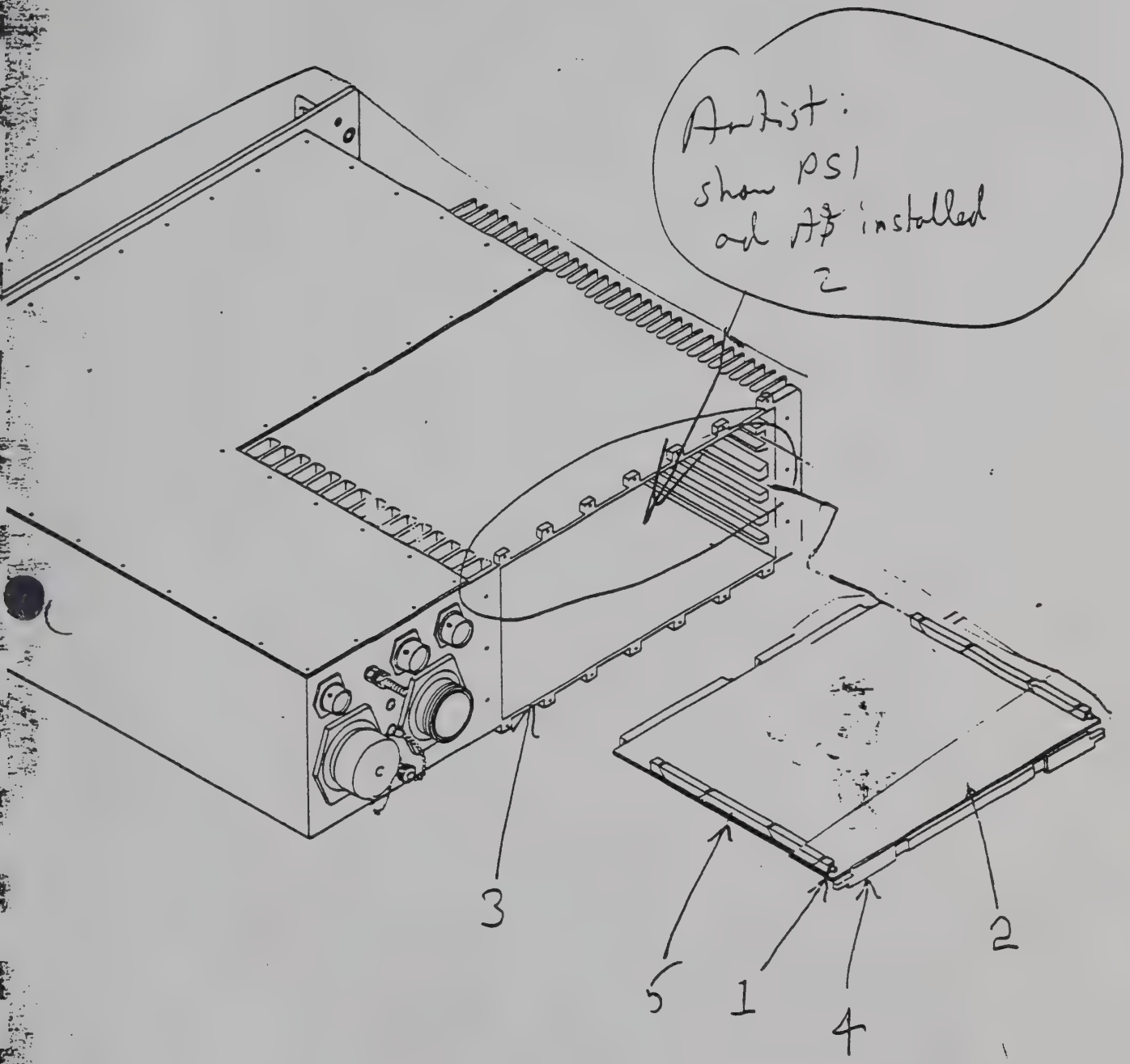

9

65168

5 in. high

REPAIR/REPLACEMENT

Repair of the recorder is accomplished by replacement of the circuit card.

INSTALLATION

a. Carefully slide circuit card (2) into chassis (3) slot marked A4.

b. Push circuit card ejectors (4) to firmly seat circuit card (2) into motherboard.

CAUTION

Avoid over tightening wedlock socket head screws. Damage to the mechanism could result. Do not over tighten or under tighten.

c. Tighten two socket head screws (1) securing circuit card (2) to chassis (3). Carefully tighten wedge locks (5) snugly to ensure thermal conductivity.

d. Install card cage cover (refer to paragraph 5-6).

5-20 REPLACE POWER SUPPLY MODULE.

INITIAL SETUP

Tools:
Electrical Equipment Tool Kit, TK-105/G

Personnel Required:
MOS basic 33T

Material/Parts:
None

Equipment Conditions:
Card cage cover removed (paragraph 5-6)

REMOVAL

a. Turn unit upside down to facilitate proper positioning of tools and wedge locks.
b. Loosen two socket head screws (1) securing wedge locks (2) to chassis (3).
c. Grasp strap (4) and carefully slide power supply (5) out of chassis (3).

REPAIR/REPLACEMENT

Repair of the recorder is accomplished by replacement of the power supply.

INSTALLATION

a. Carefully slide power supply (5) into chassis (3) slot marked PS1 and seat into motherboard connectors.
b. Tighten two socket head screws (1) securing wedge locks (2) to chassis (3). Tighten screws (1) gently but firmly, using the proper tool, to ensure thermal path conductivity.
c. Install card cage cover (refer to paragraph 5-6).

65170 (1/2 page)

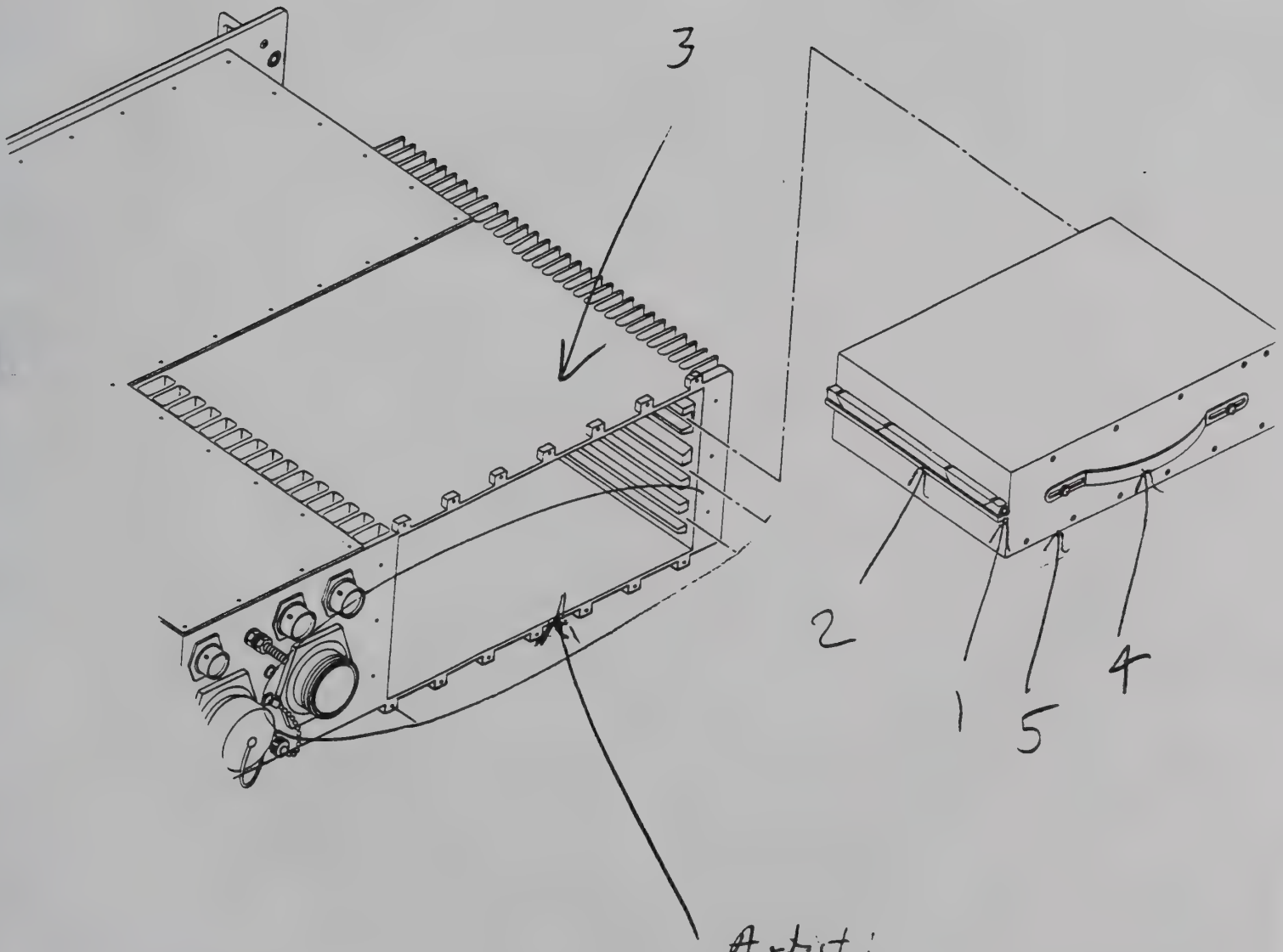

65170

Artist:
show A2 and A3
installed

5-21 REPAIR CHASSIS-ELECTRICAL EQUIPMENT.

INITIAL SETUP

Tools:

Electrical Equipment Tool Kit, TK-105/G

Personnel Required:

MOS basic 33T

Material/Parts:

See RPSTL

Equipment Conditions:

REPAIR/REPLACEMENT

Repair of the chassis is accomplished by replacement of parts coded for Direct Support listed in the Repair Parts and Special tools List (Appendix C)

NOTE

Use common shop practice to accomplish any repair which available time, skills, tools, and spare parts allow. If the chassis cannot be restored to operation with simple repair, then repair is beyond the capability of Direct Support level maintenance and is to be discarded.

Physically examine chassis after replacing defective parts to ensure successful repair.

5-22 REPLACE AUDIO WIRE HARNESS .

INITIAL SETUP

Tools:

Electrical Equipment Tool Kit, TK-105/G
Electrical Equipment Tool Kit, TK-100/G

Personnel Required:

MOS basic 33T

Material/Parts:

Adhesive (Appendix E, item 1)

Equipment Conditions:

Bottom cover removed (paragraph 5-5)
RMA removed (paragraph 4-6)
Audio EMI Filter removed (paragraph 5-15)

REMOVAL

a. Loosen two screws (1) securing CP wiring harness connector P1 (2) to motherboard connector J2 (3) and disconnect P1 (2).

b. Disconnect MIG ribbon cable connector (4) from motherboard J3 (5).

c. Loosen two screws (6) securing audio wire harness connector P1 (7) to motherboard connector J1 (8) and disconnect P1 (7).

d. Remove cover (9) on TAPE connector (10); remove jam nut (11) securing TAPE connector J7 (10) to front panel (12).

e. Remove and retain nut (13), two flatwashers (14), starwasher (15), and screw (16) securing ground wires (17) W2T5 and W1T1 to chassis at E6.

65171
(full
page)

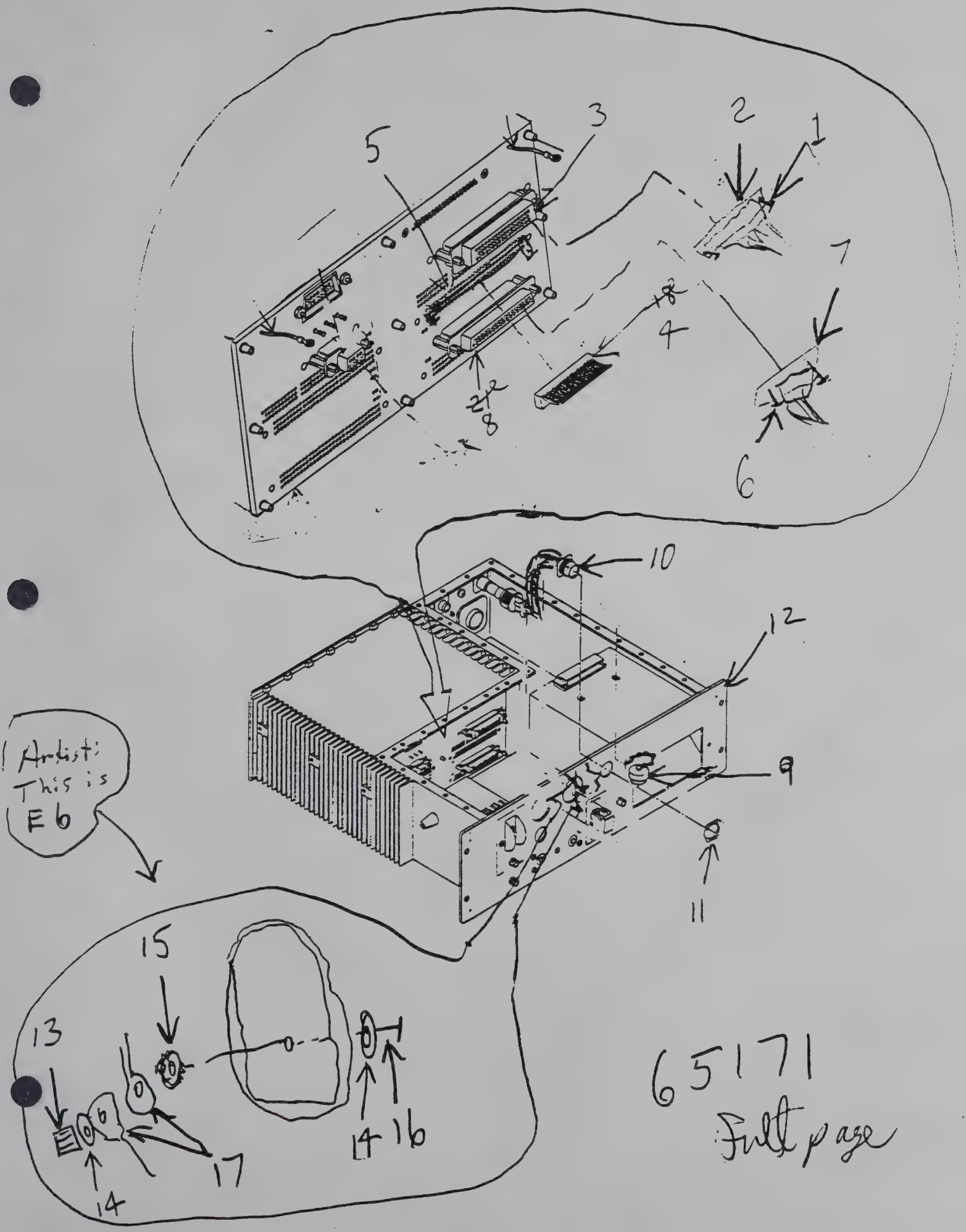

65171

Full page

f. Remove jam nut (1) securing **AUDIO IN/OUT** connector J4 (2) to rear panel.

g. Remove two jam nuts (3) securing **OPER 1** and **OPER 2** connectors J2 and J3 (4)to rear panel.

h. Remove nut (5), flatwashers (6), starwasher (7), and screw (8) securing audio wiring harness ground wire W1T5 (9) and CP wire harness ground wire W2T7 (10) to rear panel terminal E2. Disconnect ground wires (9 and 10).

i. Remove nut (11), flatwasher (12), starwasher (13), and screw (14) securing ground wires W1T3 and W1T4 (15) to terminal E3. Disconnect ground wires (15).

j. Remove tiedown straps (16) as required holding audio wire harness (17) to chassis (18).

k. By hand, carefully remove audio wire harness.

REPAIR/REPLACEMENT

Repair of the recorder is accomplished by replacement of audio wire harness.

INSTALLATION

a. By hand, carefully place the audio wire harness (17) into position within the recorder chassis (18.

b. Install Audio EMI filter (paragraph 5-15).

c. Carefully tip recorder on one side to help in placing hardware.

d. Position ground wires W1T3 and W1T4 (15) to E3 and install screw (14), starwasher (13), flatwasher (12), and nut (11).

e. Position ground wires W1T5 and W2T7 (10 and 9) to terminal E2 and install nut (5), flatwashers (6), starwasher (7) and screw (8) securing ground wires W1T5 (9) and W2T7 (10).

NOTE

Keep jam nuts tight to prevent electromagnetic emissions.

f. Install two jam nuts 3() securing **OPER 1** and **OPER 2** connectors J2 and J3 (4) to rear panel.

NOTE

For reference purposes the manufacturing torque value for J2 and J3 jam nuts is 40 in. Lbs.

g. Install jam nut (1) securing **AUDIO IN/OUT** connector J4(2) to rear panel.

NOTE

For reference purposes the manufacturing torque value for J4 jam nut is 120 in. Lbs.

65172 (full page)

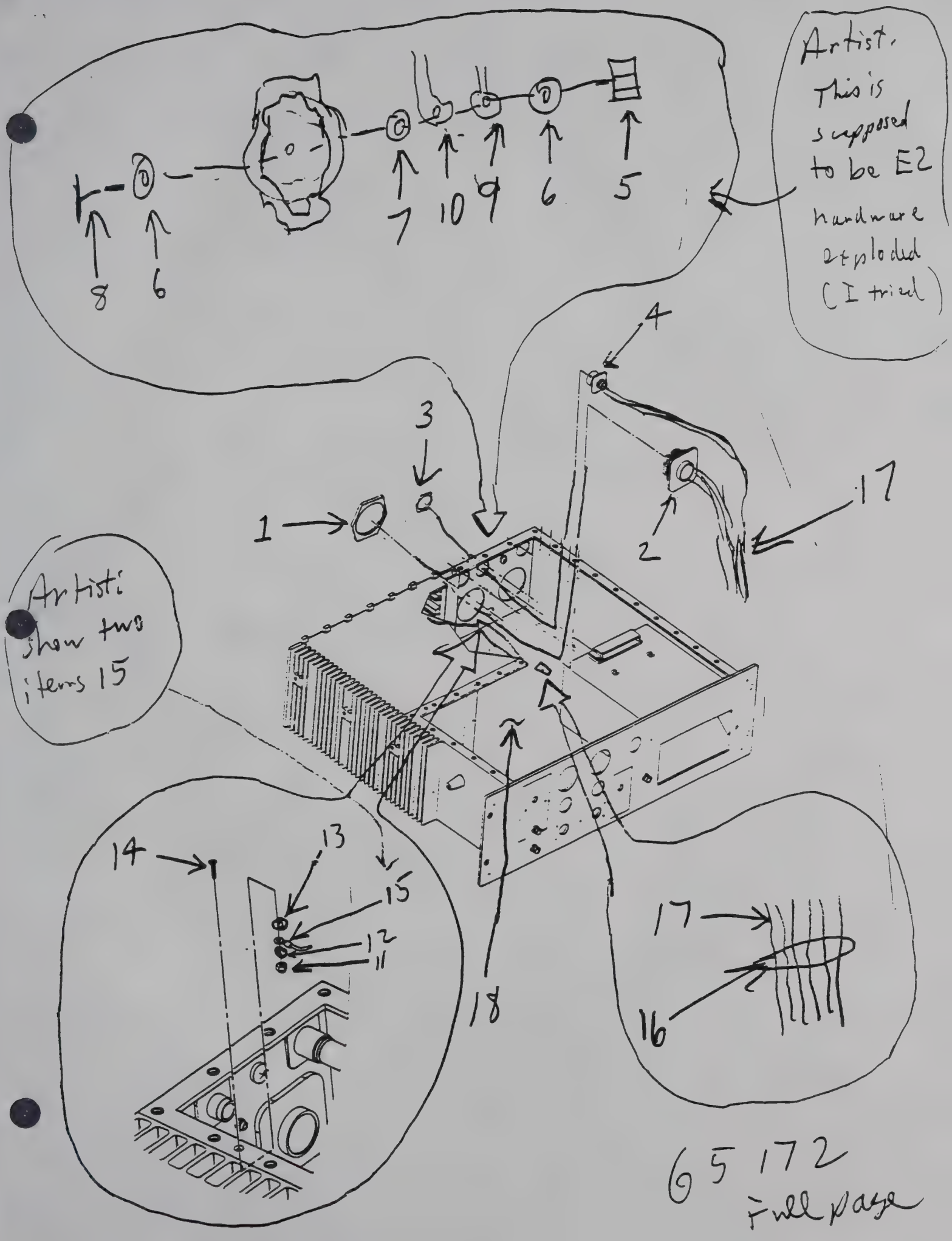

65172
Full page

h. Replace W1T1 and W2T5 ground wires (1) and install nut (2), two flatwashers (3), starwasher (4), and screw (5) securing ground wires (1) to chassis (6) at E6.

i. Install jam nut (7) securing **TAPE** connector J7 (8) to front panel (9).

NOTE

For reference purposes the manufacturing torque value for J7 jam nut is 40 in. Lbs.

j. Connect audio wire harness connector P1 (10) to motherboard connector J1 (11), tighten two screws (12) to secure.

k. Install MIG ribbon cable connector (13) to motherboard at J3 (14). Note bends and folds in cable; do not unfold.

l. Connect CP wiring harness connector P1 (15) to motherboard at J2 (16), tighten two screws (17) to secure.

n. Install bottom cover (refer to paragraph 5-5).

65173 (full page)

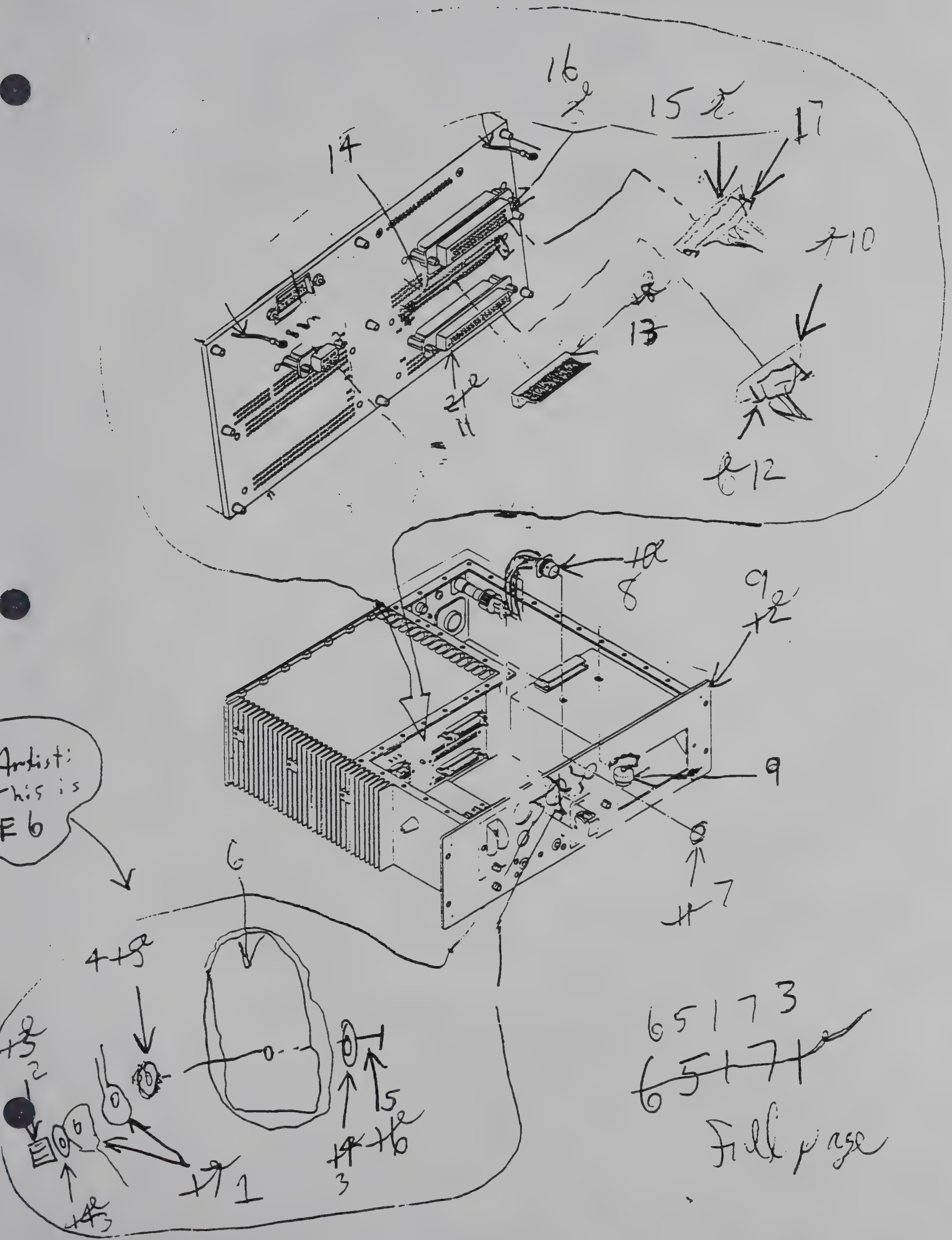

Artist: this is E6

65173

Full page

5-23 REPAIR AUDIO WIRE HARNESS.

INITIAL SETUP

Tools:
Select tools from appropriate tool kit.

Personnel Required:
MOS basic 33T

Material/Parts:
Lead-Tin Solder (Appendix E, item 7)

Equipment Conditions:
None

REPAIR/REPLACEMENT

Repair of the audio wiring harness is accomplished by replacement of parts coded for Direct Support listed in the Repair Parts and Special tools List (Appendix C)

NOTE

The audio wiring harness includes connectors J2-3, J4, and J7.

NOTE

Use common shop practice to accomplish any repair which available time, skills, tools, and spare parts allow. If audio wiring harness cannot be restored to operation with simple repair, then repair is beyond the capability of intermediate level maintenance and the wiring harness is to be discarded.

Use common shop practice to remove defective parts. Note order of steps taken to remove defective parts and replace by reversing steps. Use common shop practice to unsolder, solder, etc.

Physically examine audio wiring harness after replacing defective parts to ensure successful repair. Check continuity of repaired wires and connections (refer to Audio Wiring Harness Wiring Diagram FO 13).

5-24 REPLACE CP WIRE HARNESS.

INITIAL SETUP

Tools:

Electrical Equipment Tool Kit, TK-105/G
Electrical Equipment Tool Kit, TK-100/G

Personnel Required:

MOS basic 33T

Material/Parts:

Adhesive (Appendix E, item 1)

Equipment Conditions:

Bottom cover removed (paragraph 5-5)

REMOVAL

a. Remove LEDs DS1, DS2, and DS3 (refer to paragraph 4-9).

b. Remove S1 guard (refer to paragraph 5-11).

c. Carefully push S1 (1) inside chassis.

d. Loosen two screws (2) securing CP wiring harness connector P1 (3) to motherboard connector J2 (4) and disconnect connector (3).

e. Remove jam nut (5) securing **HOST** connector J5 (6) to chassis; carefully push connector (6) inside chassis.

f. Remove nut (7), two flatwashers (8), starwasher (9), and screw (10) securing ground leads W2T7 and W1T5 (11) to E2.

65174
(4.5 in
high)

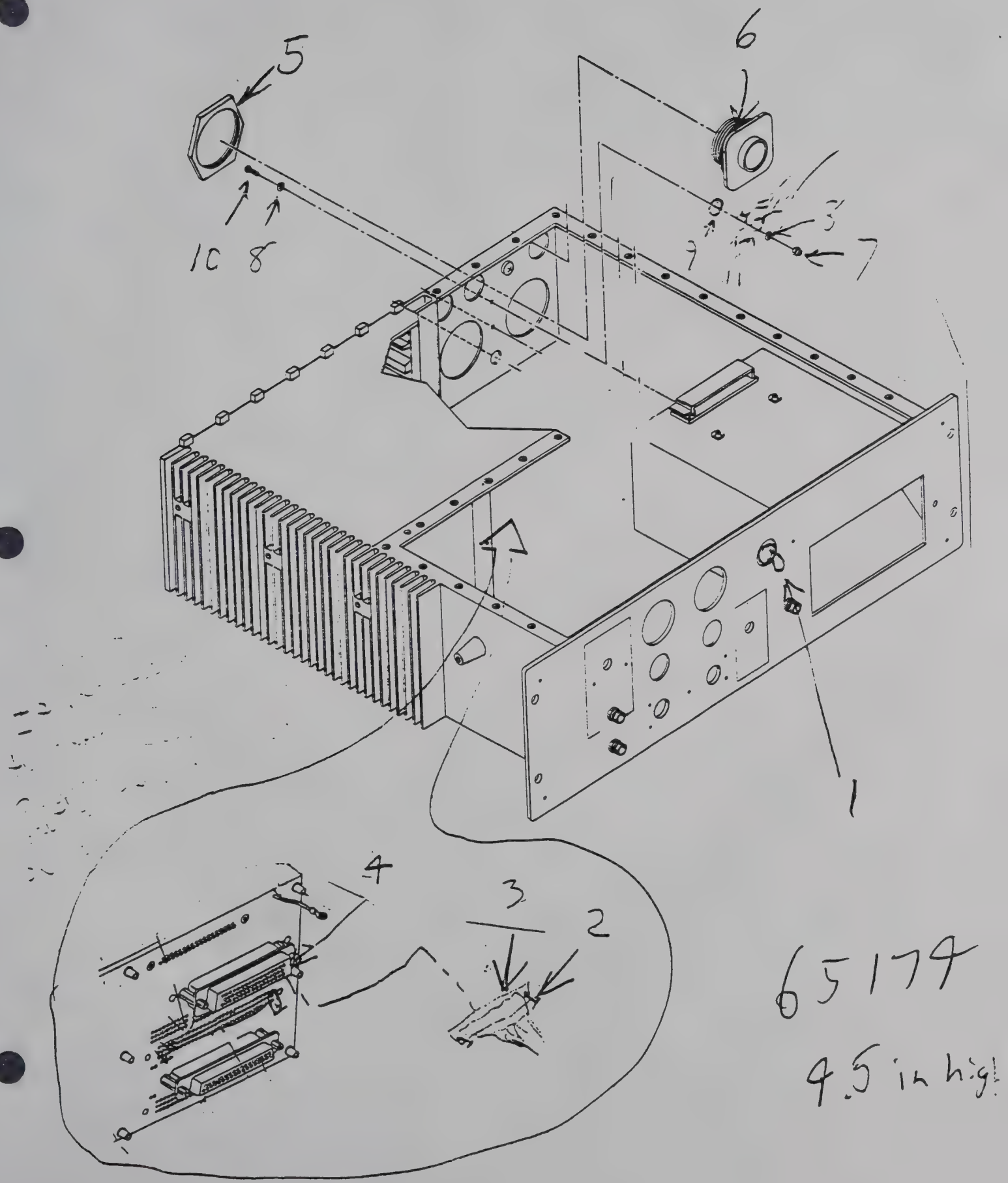

65179

4.5 in high

g. Remove two jam nuts (1) securing **FOOT SWITCH** connectors J11 and J14 (2) to chassis; carefully push connectors (2) inside chassis.

h. Remove two jam nuts (3) securing **ACP** connectors J10 and J13 (4) to chassis; carefully push connectors (4) inside chassis.

i. Remove ground nut (5) at center of audio EMI filter assembly (6) and disconnect CP wire harness leads W2T1, W2T2, and W2T4 (7).

j. Carefully cut and remove tiedown straps (8) securing CP wiring harness (9) to chassis (10).

k. Remove three jam nuts (11) securing three LED sockets to chassis front panel.

l. Remove screw (12), two flatwashers (13), starwasher (14), and locknut (15) securing ground lead W2T3 (16) to chassis at E7.

m. Remove RMA.

n. Remove screw (17), two flatwashers (18), starwasher (19), and locknut (20) securing ground leads W2T5 and W1T1 (21) to chassis (10) at E6.

o. Carefully remove CP wiring harness.

REPAIR/REPLACEMENT

Repair of the recorder is accomplished by replacement of the CP wiring harness.

INSTALLATION

a. Carefully position wiring harness (9) in chassis (10).

b. Install screw (17), two flatwashers (18), starwasher (19), and locknut (20) securing ground leads W2T5 and W1T1 (21) to chassis (10) at E6.

c. Install RMA.

d. Install screw (12), two flatwashers (13), starwasher (14), and locknut (15), securing ground lead W2T3 (16) to chassis (10) at E7.

e. Install three jam nuts (11) securing LED sockets to chassis front panel.

f. Connect CP wire harness leads W2T1, W2T2, and W2T4 (7) to ground at center of audio EMI filter assembly (6) and secure with ground nut (5).

g. Install tiedown straps (8) as required to secure audio wiring harness (9) in chassis (10).

NOTE

It is important to keep jam nuts tight to prevent electromagnetic emissions.

h. Carefully position **ACP** connectors J10 and J13 (4) in chassis mounting holes and secure with jam nuts (3).

NOTE

For reference purposes the manufacturing torque value for J13 and J10 jam nuts is 40 in. Lbs.

i. Carefully position **FOOTSWITCH** connectors J11 and J14 (2) in chassis mounting holes and secure with jam nuts (1).

65175 (full page)

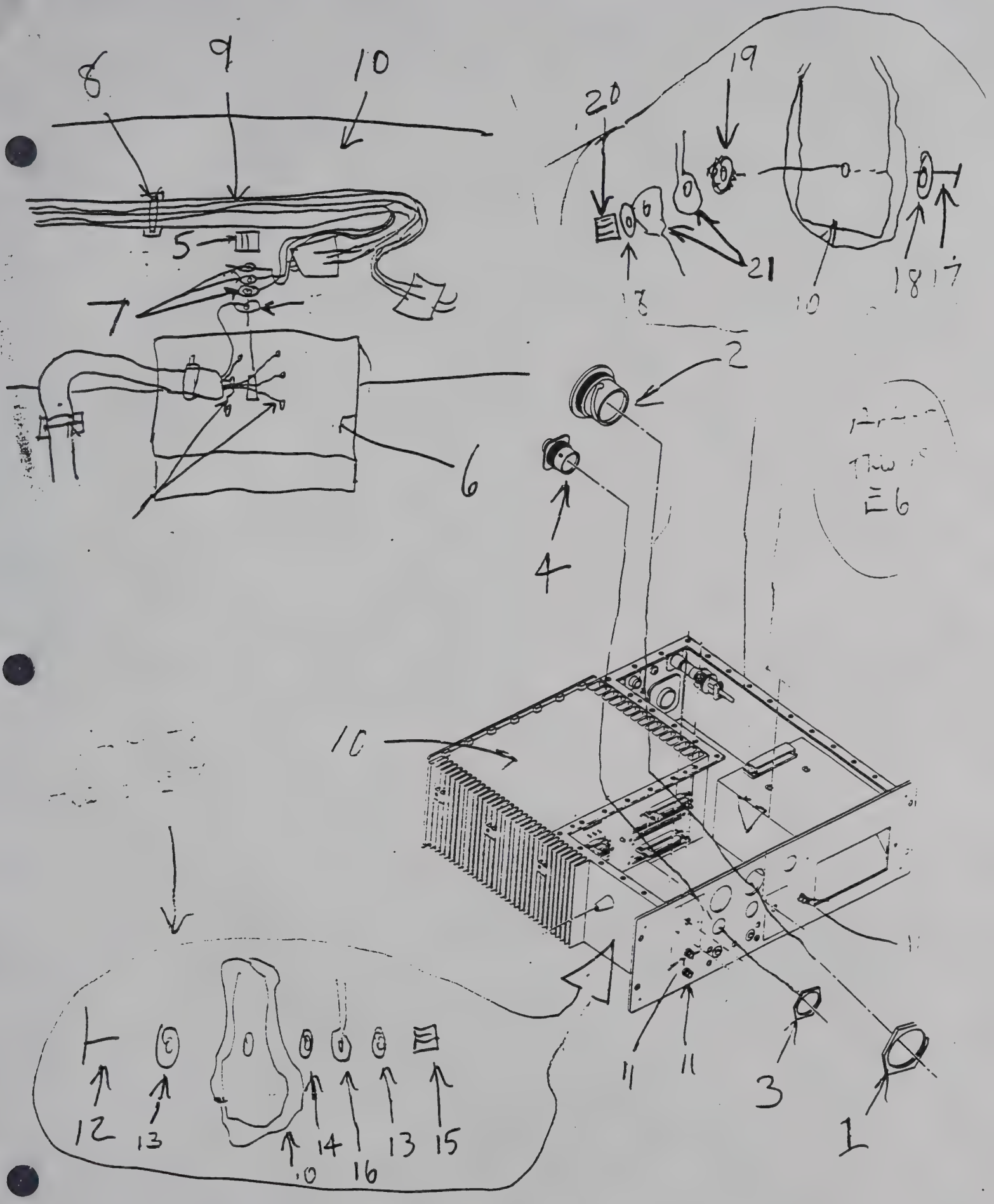

65175

End page

j. Install nut (1), two flatwashers (2), starwasher (3), screw (4), and ground leads W2T7 and W1T5 (5) to E2.

k. Carefully position J5 (6) in chassis mounting hole and secure with jam nut (7).

NOTE

For reference purposes the manufacturing torque value for J5 jam nut is 120 in. Lbs.

n. Position connector P1 (8) to motherboard connector J2 (9) and tighten two screws (10).

o. Position switch S1 (11) in chassis mounting hole.

p. Install S1 guard (refer to paragraph 5-11).

q. Install bottom cover (refer to paragraph 5-5).

r. Install LEDs DS1, DS2, and DS3 (refer to paragraph 4-9).

65176 (4.5 in high)

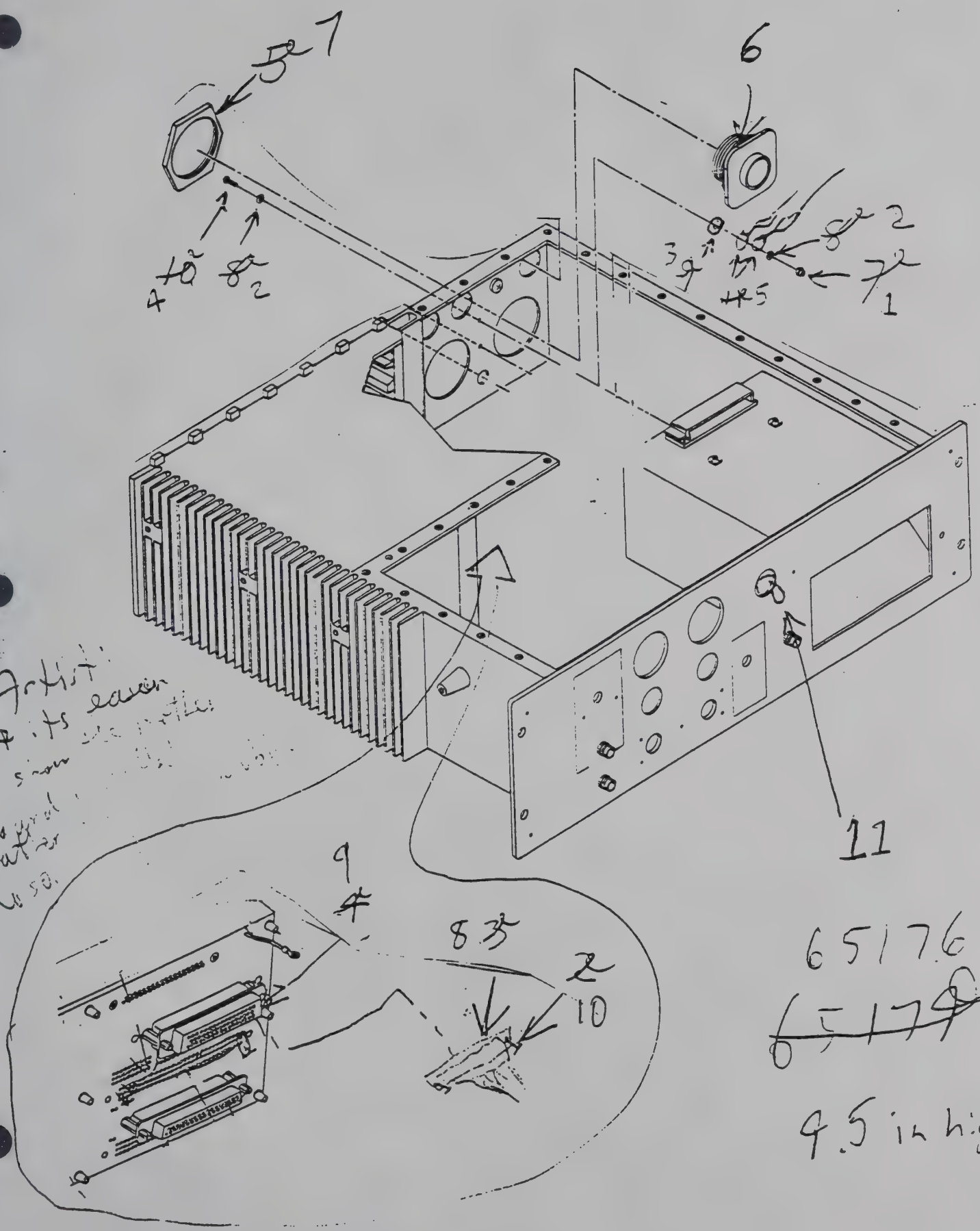

Artist:
If its easier
to show the [illegible]
board [illegible]
rather
do so.

65176

~~65179~~

9.5 in high

5-25 REPAIR CP WIRE HARNESS.

INITIAL SETUP

Tools:

Select tools from appropriate tool kit.

Personnel Required:

MOS basic 33T

Material/Parts:

Sealant Adhesive (Appendix E, item 2)
Lead-Tin Solder (Appendix E, item 7)

Equipment Conditions:

None

REPAIR/REPLACEMENT

Repair of the CP wiring harness is accomplished by replacement of parts coded for Direct Support listed in the Repair Parts and Special tools List (Appendix C).

NOTE

Use common shop practice to accomplish any repair which available time, skills, tools, and spare parts allow. If CP wiring harness cannot be restored to operation with simple repair, then repair is beyond the capability of intermediate level maintenance and the wiring harness is to be discarded.

Use common shop practice to remove defective parts. Note order of steps taken to remove defective parts and replace by reversing steps. Use common shop practice to unsolder, solder, etc.

Physically examine CP wiring harness after replacing defective parts to ensure successful repair. Check continuity of repaired wires and connections (refer to CP Wiring Harness Wiring Diagram FO 14).

5-26 REPLACE POWER EMI FILTER.

INITIAL SETUP

Tools:

Electrical Equipment Tool Kit, TK-105/G
Electrical Equipment Tool Kit, TK-100/G

Personnel Required:

MOS basic 33T

Material/Parts:

Lead-Tin Solder (Appendix E, item 8)

Equipment Conditions:

Bottom cover removed (paragraph 5-5)

REMOVAL

a. Loosen two screws (1) securing MIG power cable connector (2) to motherboard connector J4 (3) and move the cable (4) out of the way.

b. Remove four screws (5), lock washers (6), and flat washers (7), securing EMI protective cover (8) to standoffs (9); remove and retain cover (8).

c. Disconnect J1 connector (10) from power EMI filter wiring (11) (refer to paragraph 5-12).

d. Remove five terminal nuts (12) securing wires (13) to power EMI filter (14).

e. Remove four screws (15), lockwashers (16) and flatwashers (17) securing power EMI filter (14) to top of the recorder chassis (18).

f. As required for access, remove tiewraps (19) securing J1-FL1 wiring (20) to chassis (18) and CP wiring harness (20).

g. Tilt power EMI filter (14) up to gain access to ground wire (21). Remove nut (22), E9 ground wire (21) and washer (23) from power EMI filter (14).

h. Remove power EMI filter and connecting wiring from chassis.

REPAIR/REPLACEMENT

Repair of the recorder is accomplished by replacement of the Power EMI filter.

65177 (full page)

Artist: 19 is a tie wrap

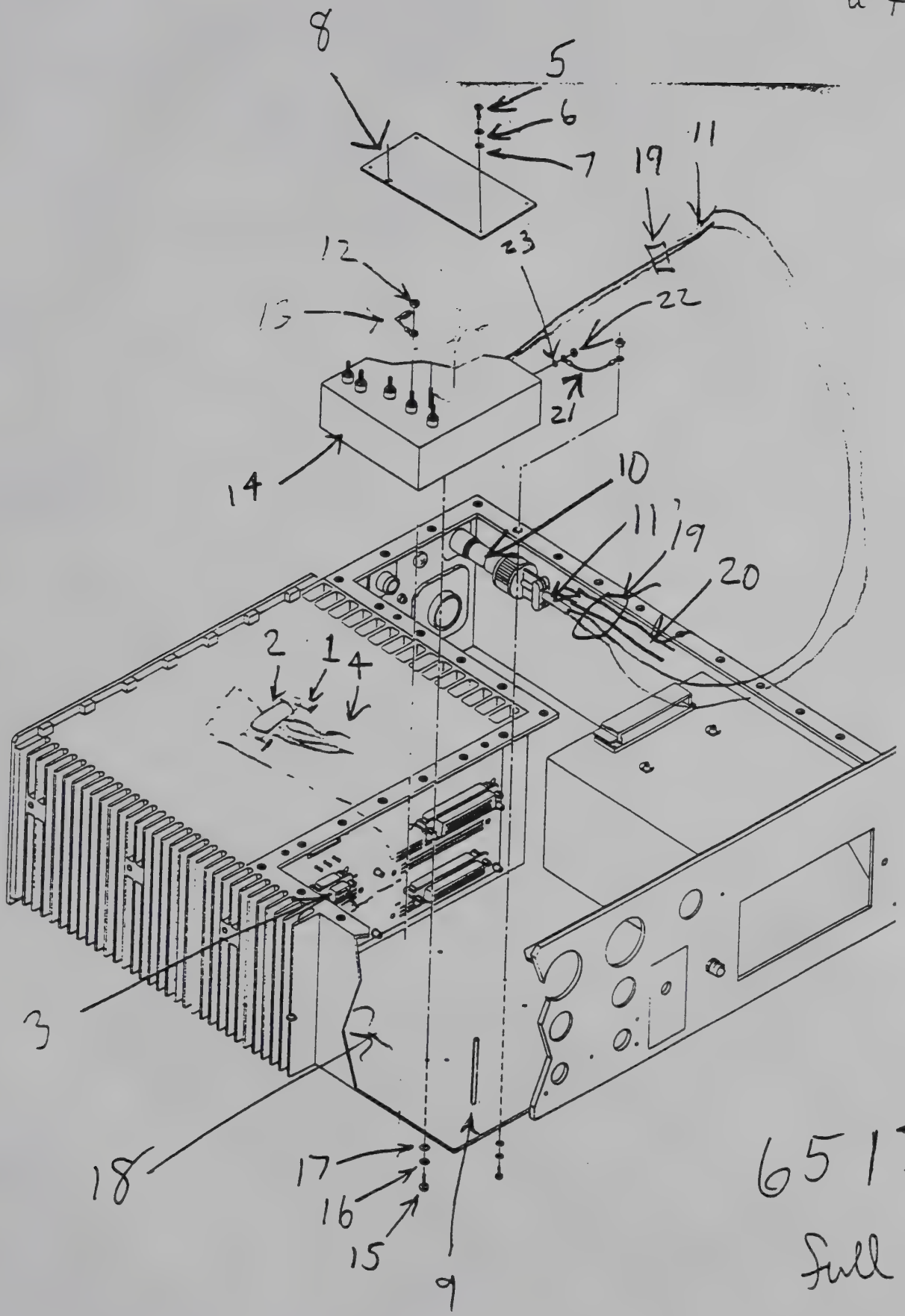

65177

full page

REPLACE POWER EMI FILTER

INSTALLATION

NOTE

Safety resistors R1 through R4 do not come with a new power EMI filter. Although it is advisable to replace the resistors, the existing resistors may be reused if necessary.

a. Place resistors R1 and R2 (1) together and join leads at ends. Solder terminal lugs (2)on lead ends.

b. Repeat step 1 above for resistors R3 and R4 (3).

c. Remove three nuts (4) from EMI filter connections 230, FL1E1, and 115.

d. Install resistors (1 and 3) on EMI filter as follows:

post 230 to post FL1E1 post 115 to post FL1E1

e. Install J1 connector to power EMI filter and chassis (paragraph 5-12).

65178 (4.5 in high)

f. Position power EMI filter (5) and its wiring (6)in chassis (7).

g. Tilt ground lug end of power EMI filter (5) up for access. Secure ground wire E9 (8) to power EMI filter (5) with washer (9) and nut (10).

h. Install four screws (11), lockwashers (12), and flatwashers (13) securing power EMI filter (5) to top of chassis (7).

i. Position wires (14) to power EMI filter (5) as follows:

T1W2 to RET T11 to POS T10 to N

T9 to 115 T8 to 230

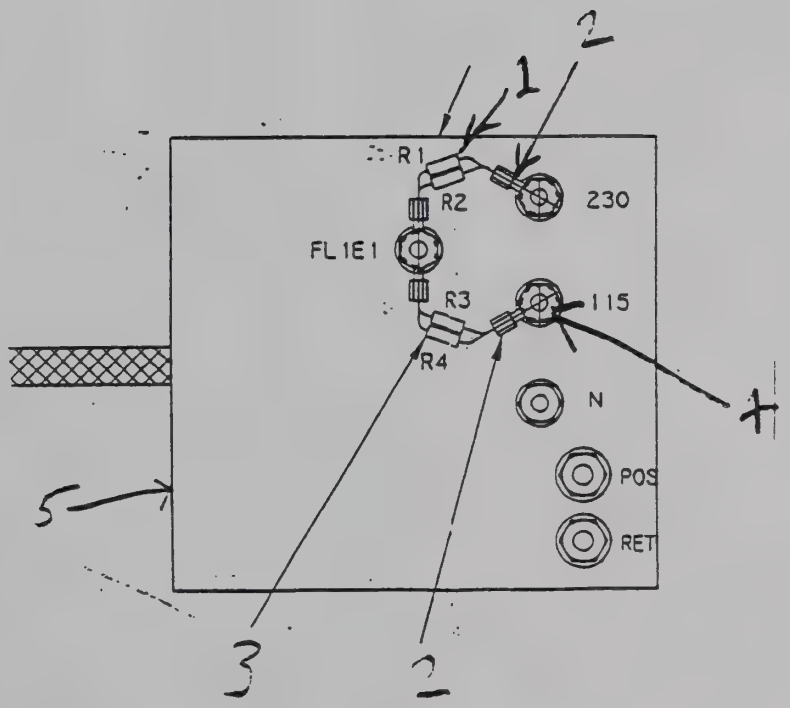

65178
4:5 in high

j. Install five terminal nuts (4) securing wires (14) to power EMI filter.

k. Install tiewraps (15) as required securing power EMI filter wiring (6) to chassis 7).

l. Place EMI protective cover (16) on standoffs (17) and install four screws (18), lockwashers (19), and flatwashers (20), and securing cover (16) to standoffs (17).

m. Position MIG power cable (21) to motherboard connector J4 (22) and tighten two screws (23).

n. Install bottom cover (refer to paragraph 5-5).

65179 (7 in high)

Artist: 15 is a tie wrap

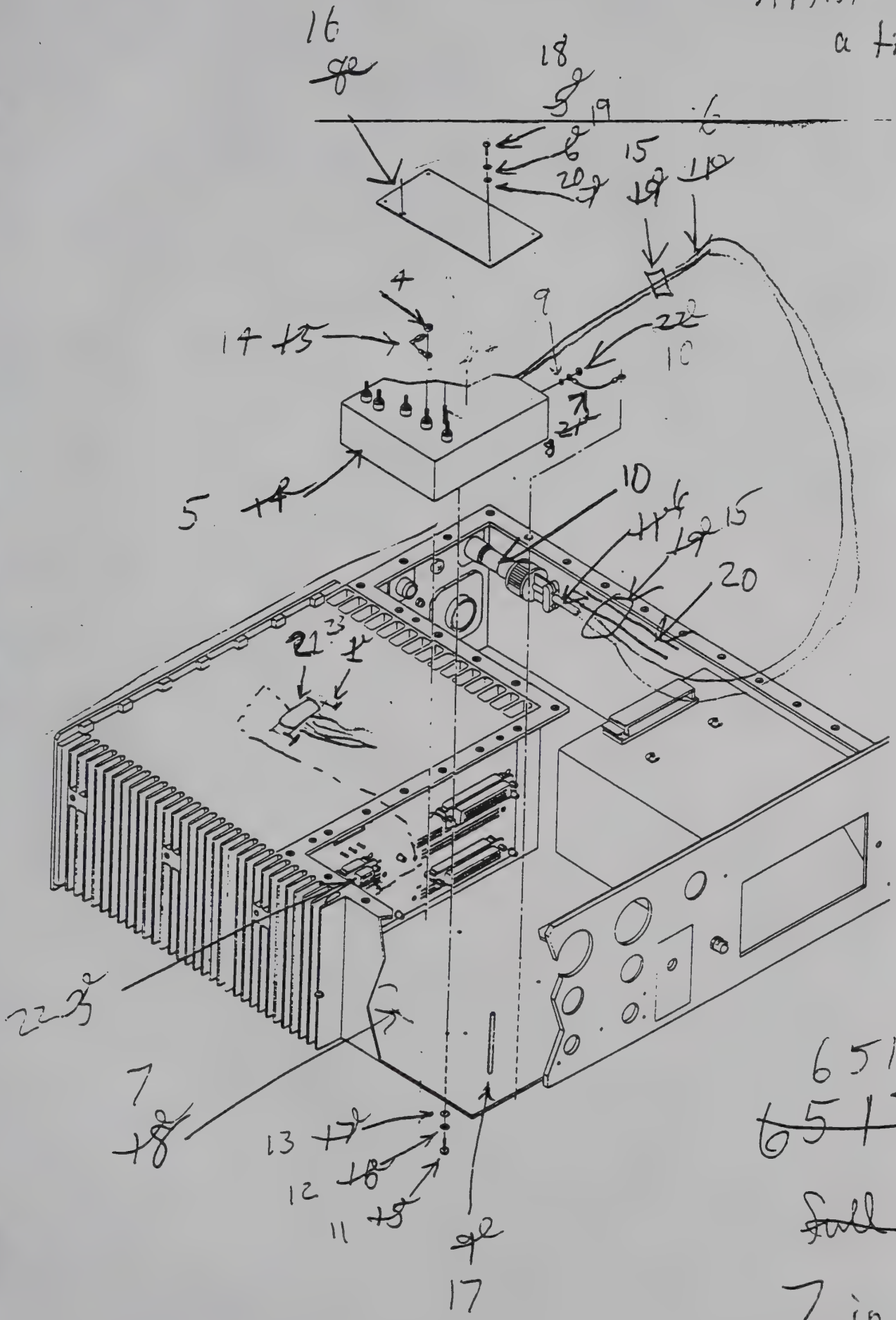

65179

~~65177~~

~~full page~~

7 in high

CHAPTER 6

GENERAL SUPPORT MAINTENANCE

There is no general support maintenance for the RRSS.

APPENDIX A

REFERENCES

A-1 SCOPE.

This appendix lists forms and publications that are referenced in this manual or that contain information applicable to the operation and maintenance of Record-Reproducer Set, Sound AN/UYH-15.

A-2 FORMS.

Report of Packing and Handling Deficiencies ..... DA Form 6

Recommended Changes to Publications and Blank Forms ..... DA Form 2028

Equipment Inspection and Maintenance Worksheet ..... DA Form 2404

Discrepancy in Shipment Report ..... SF 361

Report of Discrepancy (ROD) ..... SF 364

Quality Deficiency Report ..... SF 368

A-3 TECHNICAL MANUALS.

Hand Receipt covering Contents of Components of End Item (COEI), Basic issue Items (BII), and Additional Authorization List (AAL) for Record-Reproducer Set, Sound AN/UYH-15 ..... TM 32-5835-250-14&P-HR

Depot Maintenance work Requirement for Record-Reproducer Set, Sound AN/UYH-15 ..... DMWR 32-5835-250

Operator's, Organizational, Direct Support, and General Support Maintenance Manual (Including Repair Parts and Special Tools List) for Switch, SA-1921/G ..... TM 32-5835-005-14&P

A-4 MISCELLANEOUS PUBLICATIONS.

The Army Maintenance Management System (TAMMS) ..... DA PAM 738-750

Administrative Storage of Equipment ..... TM 740-90-1

Procedures for Destruction of Electronics Material to Prevent Enemy Use (Electronics Command) ..... TM 750-244-2

Expendable Items (Except Medical, Class V, Repair Parts, and Heraldic Items) ..... CTA 50-970

Consolidated Index of Army Publications and Blank Forms ..... DA PAM 310-1

Preservation, Packaging, and Packing and Marking Materials, Supplies, and Equipment Used by the Army ..... SB 11-573

Federal Supply Code for Manufacturers; United States and Canada, Name-to-Code and Code-to-Name (GSAFSS H4-1/H4-2) ..... SB 708-41/42

Installation Practices: Communications Systems Grounding, Bonding, and Shielding ..... FM 11-487-4/TO 31-10-24

First Aid for Soldiers ..... FM 21-11

Electrostatic Discharge Control Handbook for Protection of Electrical and Electronic Parts, Assemblies and Equipment (excluding Electrically Initiated Explosive Devices) (metric) DOD-HDBK-263

APPENDIX B

MAINTENANCE ALLOCATION CHART (MAC)

SECTION I. INTRODUCTION

B-1 THE ARMY MAINTENANCE SYSTEM MAC.

a. This information (section I) provides a general explanation of all maintenance and repair functions authorized at various maintenance levels under the standard Army Maintenance System concept.

b. The Maintenance Allocation Chart (MAC) in section II designates overall authority and responsibility for the performance of maintenance functions on the identified end item or component. The application of the maintenance functions to the end item or component will be consistent with the capacities and capabilities of the designated maintenance levels, which are shown on the MAC in column (4) as:

Unit - includes two subcolumns, C (operator/crew) and O (unit) maintenance.

Direct Support - includes an F subcolumn.

General Support - includes an H subcolumn.

Depot - includes a D subcolumn.

c. Section III lists the tools and test equipment (both special tools and common tool sets) required for each maintenance function as referenced from section II.

d. Section IV contains supplemental instructions and explanatory notes for a particular maintenance function.

B-2 MAINTENANCE FUNCTIONS.

Maintenance functions are limited to and defined as follows:

a. Inspect. To determine the serviceability of an item by comparing its physical, mechanical, and/or electrical characteristics with established standards through examination (e.g., by sight, sound, or feel).

b. Test. To verify serviceability by measuring the mechanical, pneumatic, hydraulic, or electrical characteristics of an item and comparing those characteristics with prescribed standards.

c. Service. Operations required periodically to keep an item in proper operating condition; e.g., to clean (includes decontaminate, when required), to preserve, to drain, to paint, or to replenish fuel, lubricants, chemical fluids, or gases.

d. Adjust. To maintain or regulate, within prescribed limits, by bringing into proper position, or by setting the operating characteristics to specified parameters.

e. Align. To adjust specified variable elements of an item to bring about optimum or desired performance.

f. Calibrate. To determine and cause corrections to be made or to be adjusted on instruments or test, measuring, and diagnostic equipment used in precision measurement. Consists of comparisons of two instruments, one of which is a certified standard of known accuracy, to detect and adjust any discrepancy in the accuracy of the instrument being compared.

g. Remove/Install. To remove and install the same item when required to perform service or other maintenance functions. Install may be the act of emplacing, seating, or fixing into position a spare, repair

part, or module (component or assembly) in a manner to allow the proper functioning of an equipment or system.

h. Replace. To remove an unserviceable item and install a serviceable counterpart in its place. "Replace" is authorized by the MAC and assigned maintenance level is shown as the 3d position code of the SMR code.

i. Repair. The application of maintenance services[1] including fault location/troubleshooting[2], removal/installation, and disassembly/assembly[3] procedures, and maintenance actions[4] to identify troubles and restore serviceability to an item by correcting specific damage, fault, malfunction, or failure in a part, subassembly, module (component or assembly), end item, or system.

j. Overhaul. That maintenance effort (service/action) prescribed to restore an item to a completely serviceable/operational condition as required by maintenance standards in appropriate technical publications (i.e., DMWR). Overhaul is normally the highest degree of maintenance performed by the Army. Overhaul does not normally return an item to like new condition.

k. Rebuild. Consists of those services/actions necessary for the restoration of unserviceable equipment to a like new condition in accordance with original manufacturing standards. Rebuild is the highest degree of materiel maintenance applied to Army equipment. The rebuild operation includes the act of returning to zero those age measurements (e.g., hours/miles) considered in classifying Army equipment/components.

B-3 EXPLANATION OF COLUMNS IN THE MAC, SECTION II.

a. Column 1, Group Number. Column 1 lists functional group code numbers, the purpose of which is to identify maintenance significant components, assemblies, subassemblies, and modules with the next higher assembly.

b. Column 2, Component/Assembly. Column 2 contains the item names of components, assemblies, subassemblies, and modules for which maintenance is authorized.

c. Column 3, Maintenance Function. Column 3 lists the functions to be performed on the item listed in Column 2. (For detailed explanation of these functions, see paragraph B-2.)

d. Column 4, Maintenance Level. Column 4 specifies each level of maintenance authorized to perform each function listed in Column 3, by indicating work time required (expressed as man-hours in whole hours or decimals) in the appropriate subcolumn. This work-time figure represents the active time required to perform that maintenance function at the indicated level of maintenance. If the number or complexity of the tasks within the listed maintenance function vary at different maintenance levels, appropriate work-time figures are be shown for each level. The work-time figure represents the average time required to restore an item (assembly, subassembly, component, module, end item, or system) to a serviceable condition under typical field operating conditions. This time includes preparation time (including any necessary disassembly/assembly time), troubleshooting/fault location time, and quality assurance time in addition to the time required to perform the specific tasks identified for the maintenance functions authorized in the maintenance allocation chart. The symbol designations for the various maintenance levels are as follows:

---

[1]Services - Inspect, test, service, adjust, align, calibrate, and/or replace.

[2]Fault location/troubleshooting - The process of investigating and detecting the cause of equipment malfunctioning; the act of isolating a fault within a system or unit under test (UUT).

[3]Disassembly/assembly - The step-by-step- breakdown (taking apart) of a spare/functional group coded item to the level of its least component, that is assigned an SMR code for the level of maintenance under consideration (i.e., identified as maintenance significant).

[4]Actions - Welding, grinding, riveting, straightening, facing, machining, and/or resurfacing.

C ..... Operator or crew maintenance

O ..... Unit maintenance

F ..... Direct support maintenance

L ..... Specialized Repair Activity (SRA)[5]

H ..... General support maintenance

D ..... Depot maintenance

e. Column 5, Tools and Test Equipment reference code. Column 5 specifies, by code, those common tools sets (not individual tools), common TMDE, and special tools, special TMDE, and special support equipment required to perform the designated function. Codes are keyed to tools and test equipment in section III.

f. Column 6, Remarks. When applicable, this column contains a letter code, in alphabetical order, which is keyed to the remarks contained in Section IV.

B-4 EXPLANATION OF COLUMNS IN TOOL AND TEST EQUIPMENT REQUIREMENTS, SECTION III.

a. Column 1, Reference Code. The tool and test equipment reference code correlates with a code used in the MAC, Section II, Column 5.

b. Column 2, Maintenance Level. The lowest level of maintenance authorized to use the tool or test equipment.

c. Column 3, Nomenclature. Name or identification of the tool or test equipment.

d. Column 4, National Stock Number. The National Stock Number of the tool or test equipment.

e. Column 5, Tool Number. The manufacturer's part number, model number, or type number.

B-5 EXPLANATION OF COLUMNS IN REMARKS, SECTION IV.

a. Column 1, Remarks Code. The code recorded in column 6, Section II.

b. Column 2, Remarks. This column lists information pertinent to the maintenance function being performed as indicated in the MAC, Section II.

[5]This maintenance level is not included in Section II, column (4) of the Maintenance Allocation Chart. Functions to this level of maintenance are identified by a work-time figure in the "H" column of Section II, column (4), and an associated reference code is used in the Remarks column (6). This code is keyed to Section IV, Remarks, and the SRS complete repair application is explained there.

SECTION II. MAINTENANCE ALLOCATION CHART FOR AN/UYH-15

(1)	(2)	(3)	(4) Maintenance Level					(5)	(6)
			Unit		Direct Support	General Support	Depot		
Group Number	Component/ Assembly	Maintenance Function	C	O	F	H	D	Tools and Equipment Ref Code	Remarks Code
A	RECORDER-REPRODUCER SET, SOUND AN/UYH-15	REPAIR	.00	.21	.00	.00	X		
AD	REMOVABLE MEMORY ASSEMBLY	REPLACE	.00	.01	.00	.00	.00		a
		REPAIR	.00	.00	.00	.00	X		
AP	ALTERNATE CONTROL PANEL	REPLACE	.00	.01	.00	.00	.00		
		REPAIR	.00	.00	.00	.00	X		
AR	RECORDER-REPRODUCER, SOUND RD-634/UYH-15	REPLACE	.00	.02	.00	.00	.00		
		REPAIR	.00	.00	.37	.00	X	1 - 8	
ARA1	CCA, MOTHERBOARD	REPLACE	.00	.00	.83	.00	.00	6 - 8	
		REPAIR	.00	.00	.08	.00	.00		
ARA2	CCA, AUDIO	REPLACE	.00	.00	.14	.00	.00	7, 8	
		REPAIR	.00	.00	.00	.00	X		
ARA4	CCA, CP	REPLACE	.00	.00	.14	.00	.00	7, 8	
		REPAIR	.00	.00	.00	.00	X		
ARA5	POWER SUPPLY MODULE	REPLACE	.00	.00	.14	.00	.00	7	
		REPAIR	.00	.00	.00	.00	X		
ARA7	CHASSIS-ELECTRICAL EQUIPMENT	REPAIR	.00	.00	.07	.00	X		
ARB1	WIRE HARNESS, AUDIO	REPLACE	.00	.00	.62	.00	.00	3, 6, 7	
		REPAIR	.00	.00	.12	.00	.00		
ARB2	WIRE HARNESS, CP	REPLACE	.00	.00	.66	.00	.00	3, 6, 7	
		REPAIR	.00	.00	.09	.00	.00		

SECTION III. TOOLS AND TEST EQUIPMENT FOR AN/UYH-15

Tool or Test Equipment Ref Code	Maintenance Level	Nomenclature	National Stock Number	Tool Number
1	F	MULTIMETER, DIGITAL	6625-01-145-2430	AN/USM-486
2	F	TEST SET (1), ELECTRONIC SYSTEMS	6625-01-352-3060	AN/PSM-80(V)2
3	F	MAINTENANCE KIT	6625-01-068-1665	MK-1961/G
4	F	TOOL KIT, MASTER MECHANICS	5180-00-699-5273	SC5180-90-CL-N05
5	F	SIGNAL GENERATOR	6625-00-254-6671	SG-735/URM-165
6	F	TOOL KIT, ELECTRICAL EQUIPUIPMENT	5180-00-605-0079	TK-100/G
7	F	TOOL KIT, ELECTRICAL EQUIPUIPMENT	5180-00-610-8177	TK-105/G
8	F	DISCHARGE, ELECTRICAL	4940-01-253-5368	WS9015-1

SECTION IV. REMARKS FOR AN/UYH-15

Remarks Code	Remarks
a	If the failed RMA contains classified data and cannot be zeroized, the RMA must be destroyed. Destruction of the RMA is considered complete when the internal platters (disks) of the RMA have been shattered.

APPENDIX C

ORGANIZATIONAL, DIRECT SUPPORT, AND GENERAL SUPPORT MAINTENANCE REPAIR PARTS AND SPECIAL TOOLS LIST (INCLUDING DEPOT MAINTENANCE REPAIR PARTS)

SECTION I. INTRODUCTION

C-1 SCOPE.

This RPSTL lists and authorizes spares and repair parts; special tools; special test, measurement, and diagnostic equipment (TMDE); and other special support equipment required for performance of organizational, direct support, and general support maintenance of the RRSS. It authorizes the requisitioning, issue, and disposition of spares, repair parts and special tools as indicated by the source, maintenance and recoverability (SMR) codes.

C-2 GENERAL.

In addition to Section I, Introduction, this Repair Parts and Special Tools List is divided into the following sections:

a. Section II. Repair Parts List. A list of spares and repair parts authorized by this RPSTL for use in the performance of maintenance. The list also includes parts which must be removed for replacement of the authorized parts. Parts lists are composed of functional groups in ascending alphanumeric sequence, with the parts in each group listed in ascending figure and item number sequence. Bulk materials are listed in item name sequence. Repair parts kits are listed separately in their own functional group within Section II. Repair parts for repairable special tools are also listed in this section. Items listed are shown on the associated illustration(s)/figure(s).

b. Section III. Special Tools List. Not applicable.

c. Section IV. Cross-reference Index. A list, in National item identification number (NIIN) sequence, of all National stock numbered items appearing in the listing, followed by a list in alphanumeric sequence of all part numbers appearing in the listings. National stock numbers and part numbers are cross-referenced to each illustration figure and item number appearance. The figure and item number index lists figure and item numbers in alphanumeric sequence and cross-references NSN, FSCM and part numbers.

C-3 EXPLANATION OF COLUMNS (SECTIONS II AND III).

a. ITEM NO. (Column (1)). Indicates the number used to identify items called out in the illustration.

b. SMR CODE (Column (2)). The Source, Maintenance, and Recoverability (SMR) code is a 5-position code containing supply/requisitioning information, maintenance category authorization criteria, and disposition instruction, as shown in the following breakout:

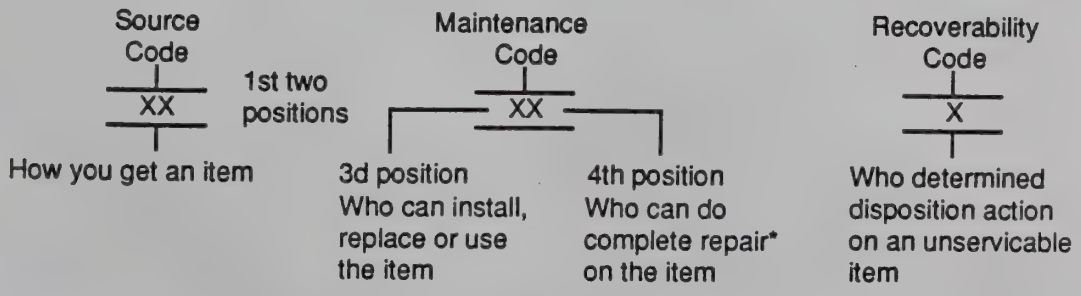

*Complete Repair: Maintenance capacity, capability, and authority to perform all corrective maintenance tasks of the "Repair" function in a use/user environment in order to restore serviceability to a failed item.

(1) Source Code. The source code tells you how to get an item needed for maintenance, repair, or overhaul of an end item/equipment. Explanations of source codes follows:

Code	Explanation
PA PB PC** PD PE PF PG	Stocked items; use the applicable NSN to request/requisition items with these source codes. They are authorized to the category indicated by the code entered in the 3d position of the SMR code. **NOTE: Items coded PC are subject to deterioration.
KD KF KB	Items with these codes are not to be requested/requisitioned individually. They are part of a kit which is authorized to the maintenance category indicated in the 3d position of the SMR code. The complete kit must be requisitioned and applied.

Code		Explanation
MO -	(Made at org/ AVUM Level)	Items with these codes are not to be requested/requisitioned individually. They must be made from bulk material which is identified by the part number in the DESCRIPTION AND USABLE ON CODE (UOC) column and listed in the Bulk Material group of the repair parts list in this RPSTL. If the item is authorized to you by the 3d position code of the SMR code, but the source code indicates it is made at a higher level, order the item from the higher level of maintenance.
MF-	(Made at DS/ AVUM Level)	
MH-	(Made at GS Level)	
ML-	(Made at Specialized Repair Act (SRA)	
MD-	(Made at Depot)	

Code		Explanation
AO-	Assembled by org/AVUM Level)	Items with these codes are not to be requested/requisitioned individually. The parts that make up the assembled item must be requisitioned or fabricated and assembled at the level of maintenance indicated by the source code. If the 3d position code of the SMR code authorizes you to replace the item, but the source code indicates the item is assembled at a higher level, order the item from the higher level of maintenance.
AF-	(Assembled by DS/AVIM Level)	
AH-	(Assembled by GS Category)	
AL-	(Assembled by SRA)	
AD-	(Assembled by Depot)	

XA - Do not requisition an "XA"-coded item. Order its next higher assembly. (Also, refer to the NOTE below.)

XB - If an "XB" item is not available from salvage, order it using the FSCM and part number given.

XC - Installation drawing, diagram, instruction sheet, field service drawing, that is identified by manufacturer's part number.

XD - Item is not stocked. Order an "XD"-coded item through normal supply channels using the FSCM and part number given, if no NSN is available.

NOTE: Cannibalization or controlled exchange, when authorized, may be used as a source of supply for items with the above source codes, except for those source coded "XA" or those aircraft support items restricted by requirements of AR 700-42.

(2) Maintenance Code. Maintenance codes tells you the level(s) of maintenance authorized to USE and REPAIR support items. The maintenance codes are entered in the third and fourth positions of the SMR Code as follows:

(a) The maintenance code entered in the third position tells you the lowest maintenance level authorized to remove, replace, and use an item. The maintenance code entered in the third position will indicate authorization to one of the following levels of maintenance.

Code	Application/Explanation
C	- Crew or operator maintenance done within organizational or aviation unit maintenance.
O	- Organizational or aviation unit category can remove, replace, and use the item.
F	- Direct support or aviation intermediate level can remove, replace, and use the item.
H	- General support level can remove, replace, and use the item.
L	- Specialized repair activity can remove, replace, and use the item.
D	- Depot level can remove, replace, and use the item.

(b) The maintenance code entered in the fourth position tells whether or not the item is to be repaired and identifies the lowest maintenance level with the capability to do complete repair (i.e., perform all authorized repair functions.) (NOTE: Some limited repair may be done on the item at a lower level of maintenance, if authorized by the Maintenance Allocation Chart (MAC) and SMR codes.) This position will contain one of the following maintenance codes.

Code	Application/Explanation
O	- Organizational or (aviation unit) is the lowest level that can do complete repair of the item.
F	- Direct support or aviation intermediate is the lowest level that can do complete repair of the item.
H	- General support is the lowest level that can do complete repair of the item.
L	- Specialized repair activity (designate the specialized repair activity) is the lowest level that can do complete repair of the item.
D	- Depot is the lowest level that can do complete repair of the item.
Z	- Nonreparable. No repair is authorized.
B	- No repair is authorized. (No parts or special tools are authorized for the maintenance of a "B" coded item). However, the item may be reconditioned by adjusting, lubricating, etc., at the user level.

(3) Recoverability Code. Recoverability codes are assigned to items to indicate the disposition action on unserviceable items. The recoverability code is entered in the fifth position of the SMR Code as follows:

Recoverability Codes	Application/Explanation
Z	- Nonreparable item. When unserviceable, condemn and dispose of the item at the level of maintenance shown in 3d position of SMR Code.
O	- Reparable item. When uneconomically reparable, condemn and dispose of the item at organizational or aviation unit level.
F	- Reparable item. When uneconomically reparable, condemn and dispose of the item at the direct support or aviation intermediate level.
H	- Reparable item. When uneconomically reparable, condemn and dispose of the item at the general support level.
D	- Reparable item. When beyond lower level repair capability, return to depot. Condemnation and disposal of item not authorized below depot level.
L	- Reparable item. Condemnation and disposal not authorized below specialized repair activity (SRA).
A	- Item requires special handling or condemnation procedures because of specific reasons (e.g., precious metal content, high dollar value, critical material, or hazardous material). Refer to appropriate manuals/directives for specific instructions.

c. FSCM (Column (3)). The Federal Supply Code for Manufacturer (FSCM) is a 5-digit numeric code which is used to identify the manufacturer, distributor, or Government agency, etc., that supplies the item.

d. PART NUMBER (Column (4)). Indicates the primary number used by the manufacturer (individual, company, firm, corporation, or Government activity), which controls the design and characteristics of the item by means of its engineering drawings, specifications standards, and inspection requirements to identify an item or range of items.

NOTE: When you use a NSN to requisition an item, the item you receive may have a different part number from the part ordered.

e. DESCRIPTION AND USABLE ON CODE (UOC) (Column (5)). This column includes the following information:

(1) The Federal item name and, when required, a minimum description to identify the item.

(2) The physical security classification of the item is indicated by the parenthetical entry (Y) e.g., Phy Sec C1 (C) -Confidential, Phy Sec C1 (S) -Secret, Phy Sec C1 (T) -Top Secret).

(3) Items that are included in kits and sets are listed below the name of the kit or set.

(4) Spare/repair parts that make up an assembled item are listed immediately following the assembled item line entry.

(5) Part numbers for bulk materials are referenced in this column in the line item entry for the item to be manufactured/fabricated.

(6) When the item is not used with all serial numbers of the same model, the effective serial numbers are shown on the last line(s) of the description (before UOC).

(7) The usable on code, when applicable (see paragraph 5, Special information).

(8) In the Special Tools List section, the basis of issue (BOI) appears as the last line(s) in the entry for each special tool, special TMDE, and other special support equipment. When density of equipments supported exceeds density spread indicated in the basis of issue, the total authorization is increased proportionately.

(9) The statement "END OF FIGURE" appears just below the last item description in Column 5 for a given figure in both Section II and Section III.

f. QTY (Column (6)). The QTY (quantity per figure column) indicates the quantity of the item used in the breakout shown on the illustration figure, which is prepared for a functional group, subfunctional group, or an assembly. A "V" appearing in this column in lieu of a quantity indicates that the quantity is variable and the quantity may vary from application to application.

C-4 EXPLANATION OF COLUMNS (SECTION IV).

a. National Stock Number (NSN) Index.

(1) STOCK NUMBER column. This column lists the NSN by National item identification number (NIIN) sequence. The NIIN consists of the last nine digits of the NSN (i.e., 5305-01-674-1467). When using this column to locate an item, ignore the first 4 digits of the NSN. However, the complete NSN should be used when ordering items by stock number.

NSN
NIIN

(2) FIG. column. This column lists the number of the figure where the item is identified/located. The figures are in numerical order in Section II and Section III.

(3) ITEM column. The item number identifies the item associated with the figure listed in the adjacent FIG. column. This item is also identified by the NSN listed on the same line.

b. Part Number Index. Part numbers in this index are listed by part number in ascending alphanumeric sequence (i.e., vertical arrangement of letter and number combination which places the first letter or digit of each group in order A through Z, followed by the numbers 0 through 9 and each following letter or digit in like order).

(1) FSCM column. The Federal Supply Code for Manufacturer (FSCM) is a 5-digit numeric code used to identify the manufacturer, distributor, or Government agency, etc., that supplies the item.

(2) PART NUMBER column. Indicates the primary number used by the manufacturer (individual, firm, corporation, or Government activity), which controls the design and characteristics of the item by means of its engineering drawings, specifications standards, and inspection requirements to identify an item or range of items.

(3) STOCK NUMBER column. This column lists the NSN for the associated part number and manufacturer identified in the PART NUMBER and FSCM columns to the left.

(4) FSCM column. This column lists the number of the figure where the item is identified/located in Section II and III.

(5) ITEM column. The item number is that number assigned to the item as it appears in the figure referenced in the adjacent figure number column.

c. Figure and Item Number Index.

(1) FIG. column. This column lists the number of the figure where the item is identified/located in Section II and Section III.

(2) ITEM column. The item number is that number assigned to the item as it appears in the figure referenced in the adjacent figure number column.

(3) STOCK NUMBER column. This column lists the NSN for the item.

(4) FSCM column. The Federal Supply Code for Manufacturer (FSCM) is a 5-digit numeric code used to identify the manufacturer, distributor, or Government agency, etc., that supplies the item.

(5) PART NUMBER column. Indicates the primary number used by the manufacturer (individual, firm, corporation, or Government activity), which controls the design and characteristics of the item by means of its engineering drawings, specifications standards, and inspection requirements to identify an item or range of items.

c. Reference Designator (REFDES) Index.

(1) REF. DES. column. This column lists the reference designator for the associated part identified in the FIG and ITEM columns to the left.

(2) FIG. column. This column lists the number of the figure where the item is identified/located in Section II and Section III.

(3) ITEM column. The item number is that number assigned to the item as it appears in the figure referenced in the adjacent figure number column.

C-5 SPECIAL INFORMATION.

Use the following subparagraphs as applicable:

a. Usable on Code. Not applicable.

b. Fabrication Instructions. Bulk materials required to manufacture items are listed in the Bulk Material Functional Group of this RPSTL. Part numbers for bulk materials are also referenced in the description column of the line item entry for the item to be manufactured/fabricated. Detailed fabrication instructions for items source codes to be manufactured or fabricated are found in DMWR 32-5835-250.

c. Assembly Instructions. Not applicable.

d. Kits. Not applicable.

e. Index Numbers. Items which have the word BULK in the figure column will have an index number shown in the item number column. This index number is a cross-reference between the National Stock Number/Part Number Index and the bulk material list in Section II.

f. Associated Publications. Not applicable.

g. Illustrations - Listing. Not applicable.

C-6 HOW TO LOCATE REPAIR PARTS.

a. When National Stock number or Part Number is Not Known.

(1) First. Using the table of contents, determine the assembly group or subassembly group to which the item belongs. This is necessary since figures are prepared for assembly groups and subassembly groups, and listings are divided into the same groups.

(2) Second. Find the figure covering the assembly group of subassembly group to which the item belongs.

(3) Third. Identify the item on the figure and use the Figure and Item Number Index to find the NSN.

b. When National Stock number or Part Number is Known.

(1) First. Using the National Stock Number or the Part Number Index, find the pertinent National Stock Number or Part Number. The NSN index is in National Item identification Number (NIIN) sequence (see 4.1(1)). The part numbers in the Part Number index are listed in ascending alphanumeric sequence (see 4.b). Both indexes cross-reference you to the illustration/figure and item number of the item you are looking for.

(2) Second. Turn to the figure and item number, verify that the item is the one you're looking for, then locate the item number in the repair parts list for the figure.

C-7 ABBREVIATIONS.

Abbreviations	Explanation
NIIN	National Item Identification Number (consists of the last 9 digits of the NSN)
RPSTL	Repair Parts and Special Tools List

65099

Figure 1. Recorder-Reproducer Set, Sound AN/UYH-15

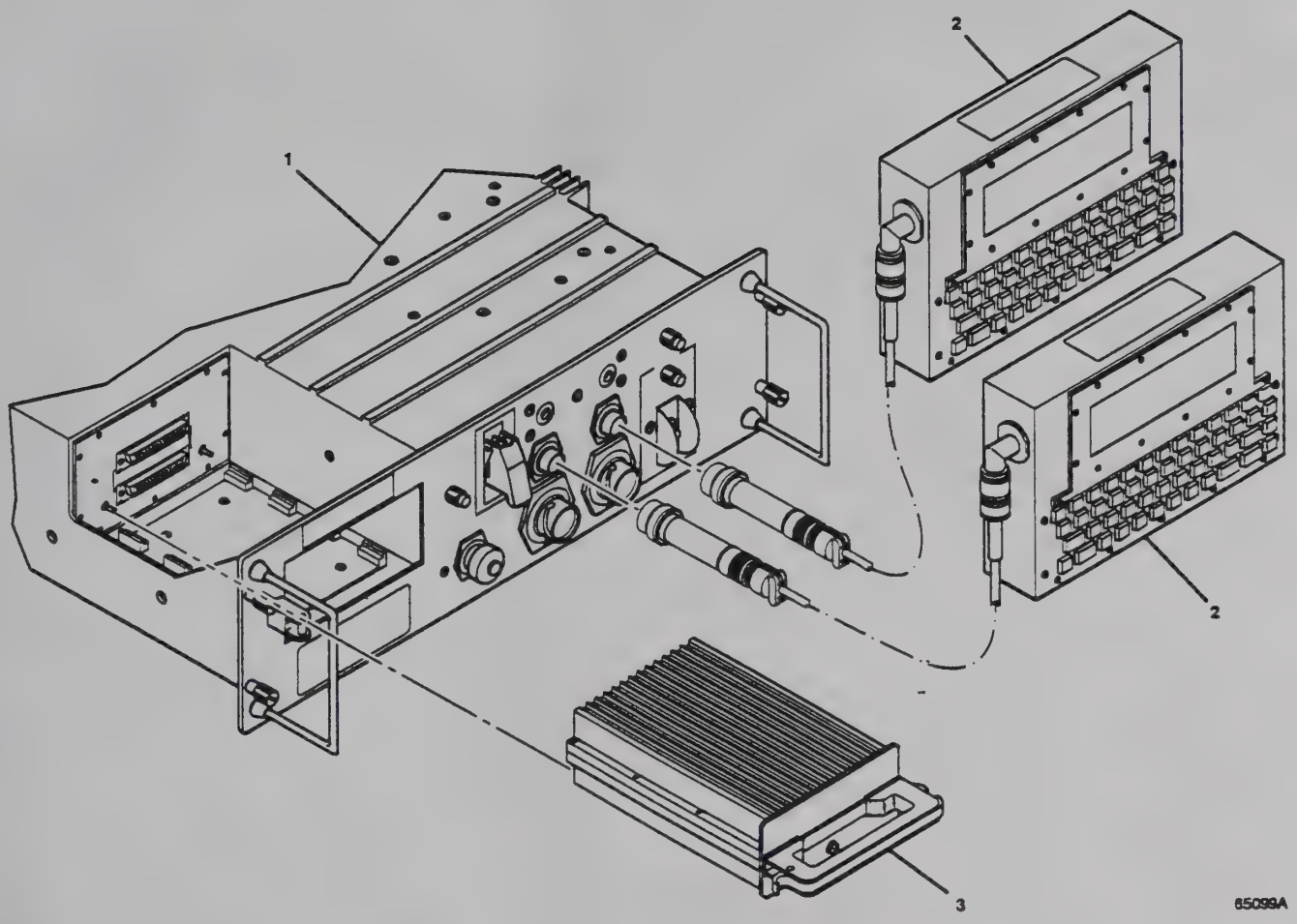
1
2
2
3
65099A

(1) Item No	(2) SMR Code	(3) FSCM	(4) Part Number	(5) Description and Usable on Code (UOC)	(6) Qty

Figure 1 data
NOTE TO WRITER: Classification code will need to be added manually to the RMA.

65100-1 thru ?

Figure 2. Recorder-Reproducer, Sound RD-634/UYH-15

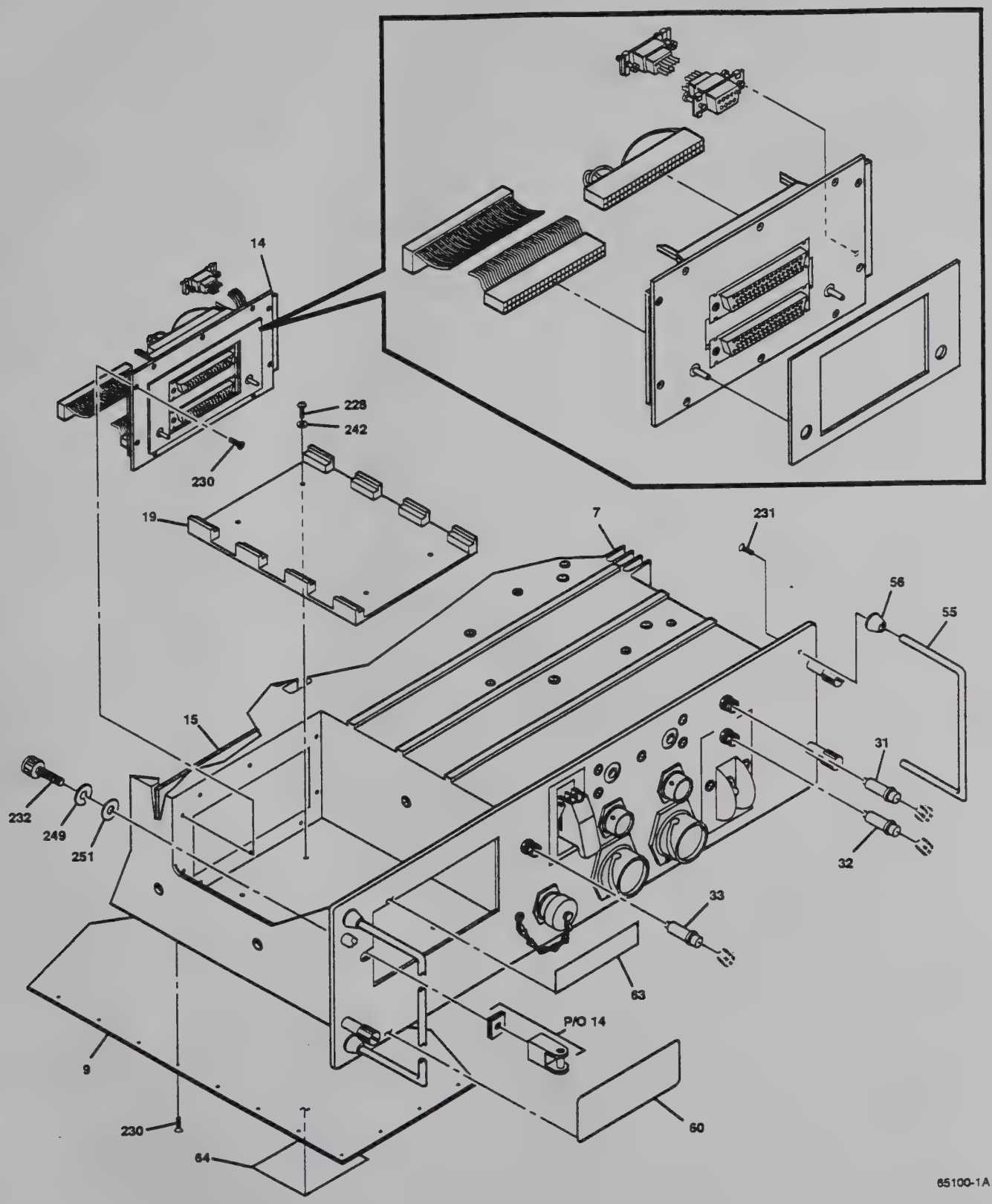
14
228
242
230
19
7
231
56
55
15
31
232
249
251
32
33
63
P/O 14
9
230
60
64
65100-1A

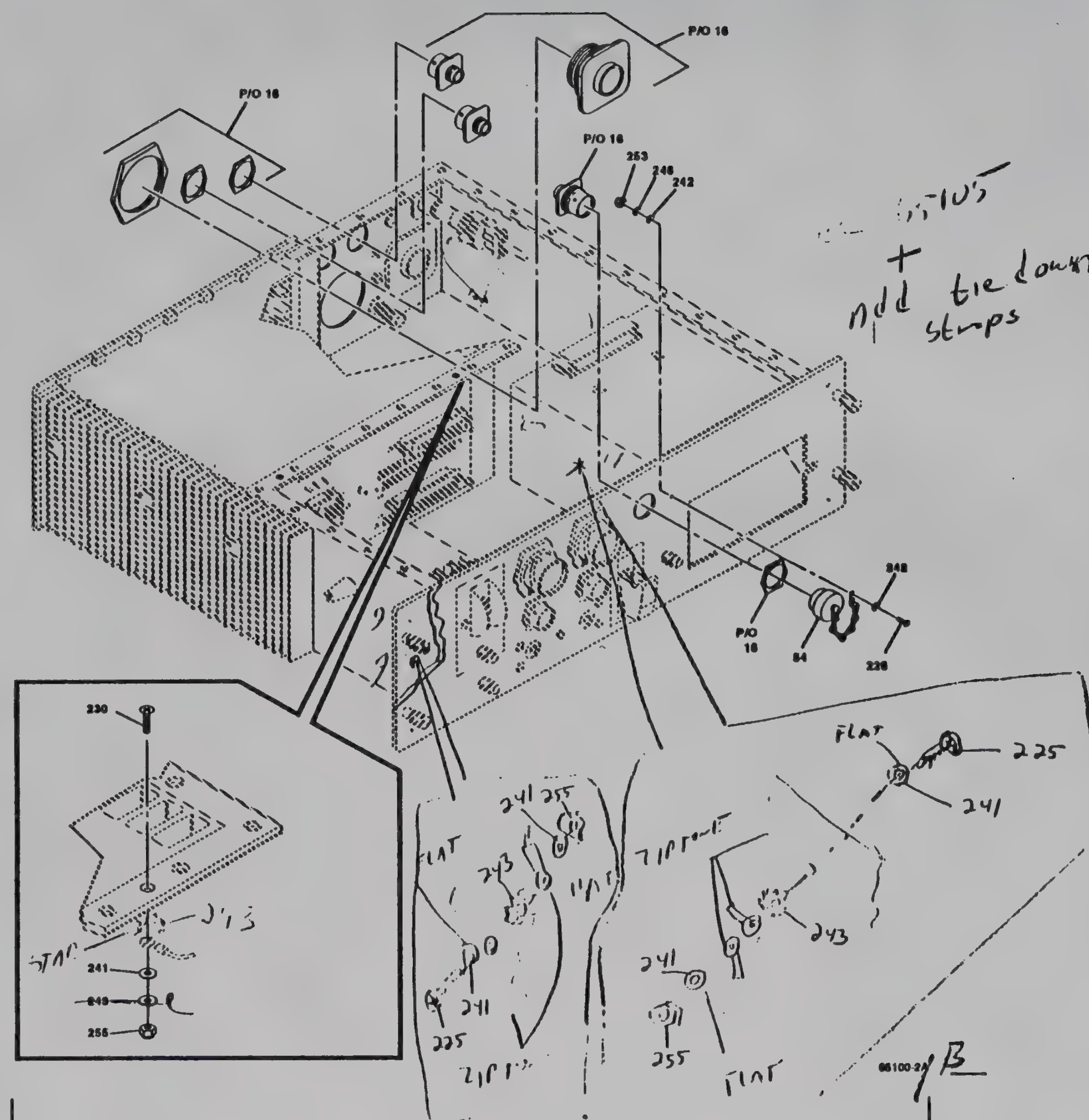

P/O 18
P/O 18
P/O 18
253
248
242
248
P/O 18
84
228
230
241
249
255
FLAT
225
241
243
255
add tie down straps

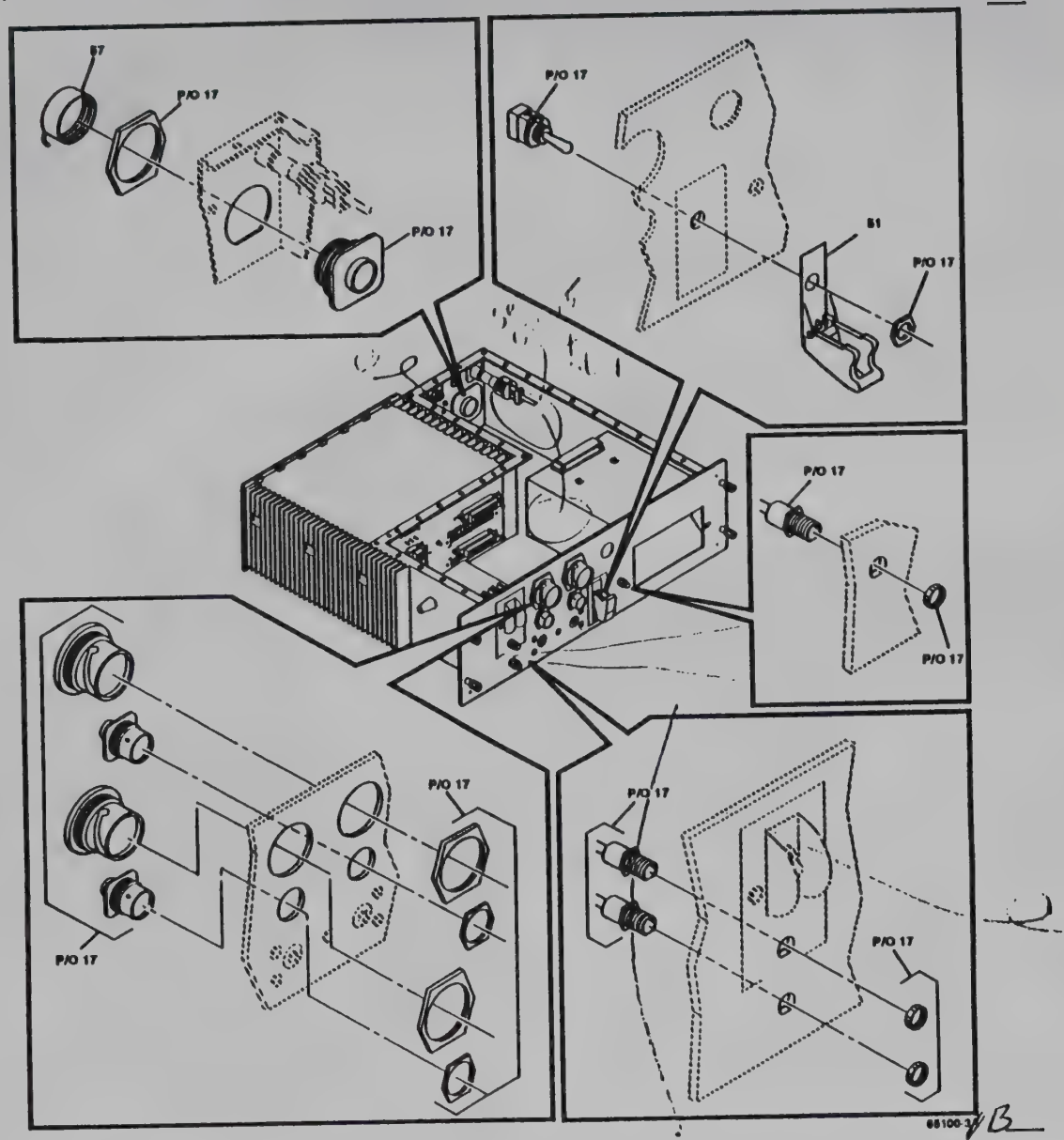
B7
P/O 17
P/O 17
P/O 17
S1
P/O 17
P/O 17
P/O 17
P/O 17
P/O 17
P/O 17
65100-3

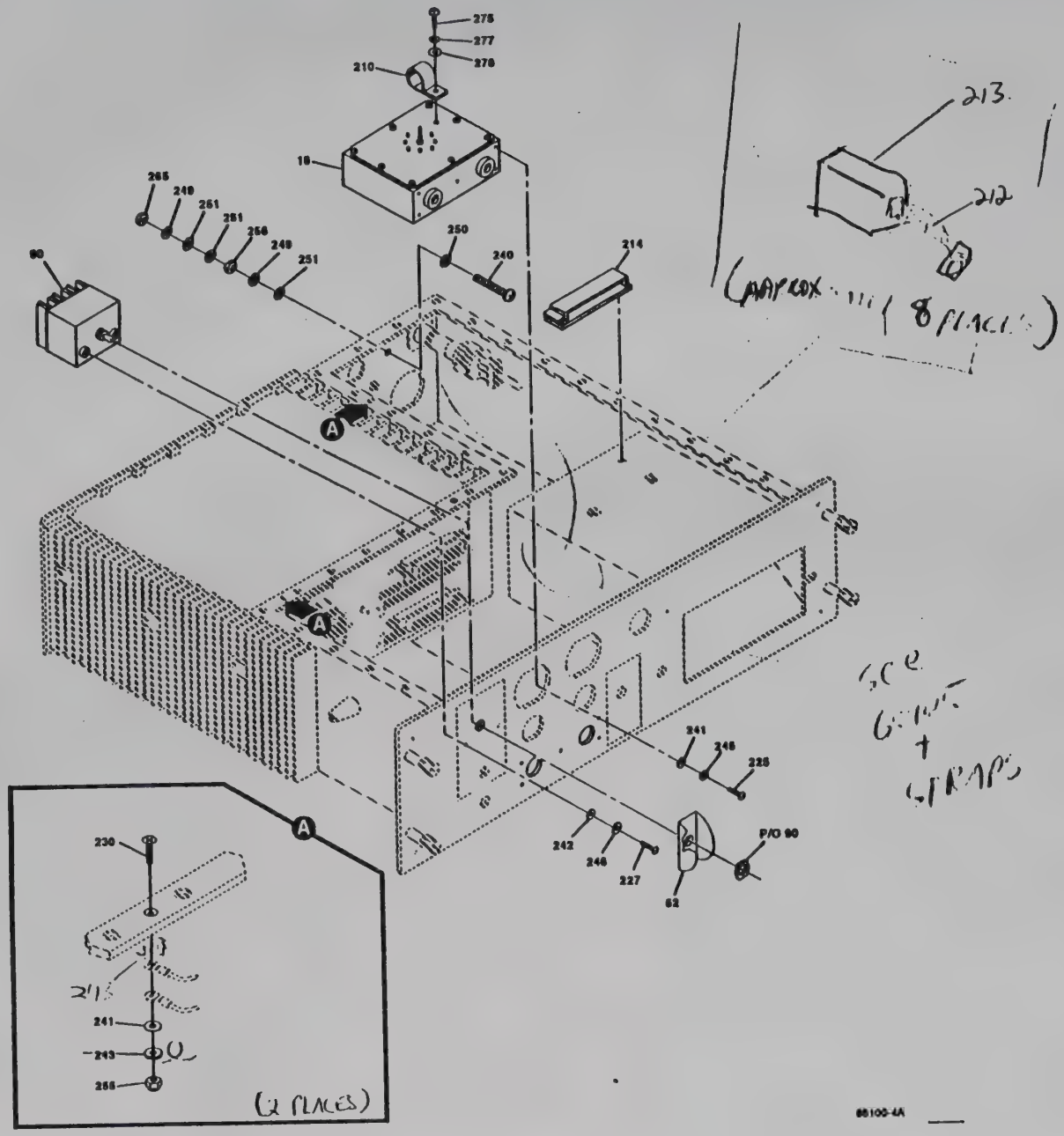
275
277
278
210
18
265
249
251
251
256
249
251
250
240
214
90
A
A
A
241
245
225
242
246
227
62
P/O 90
230
241
243
255
(2 PLACES)
213
212
(8 PLACES)
SCE
+
STRAPS
86100-4A

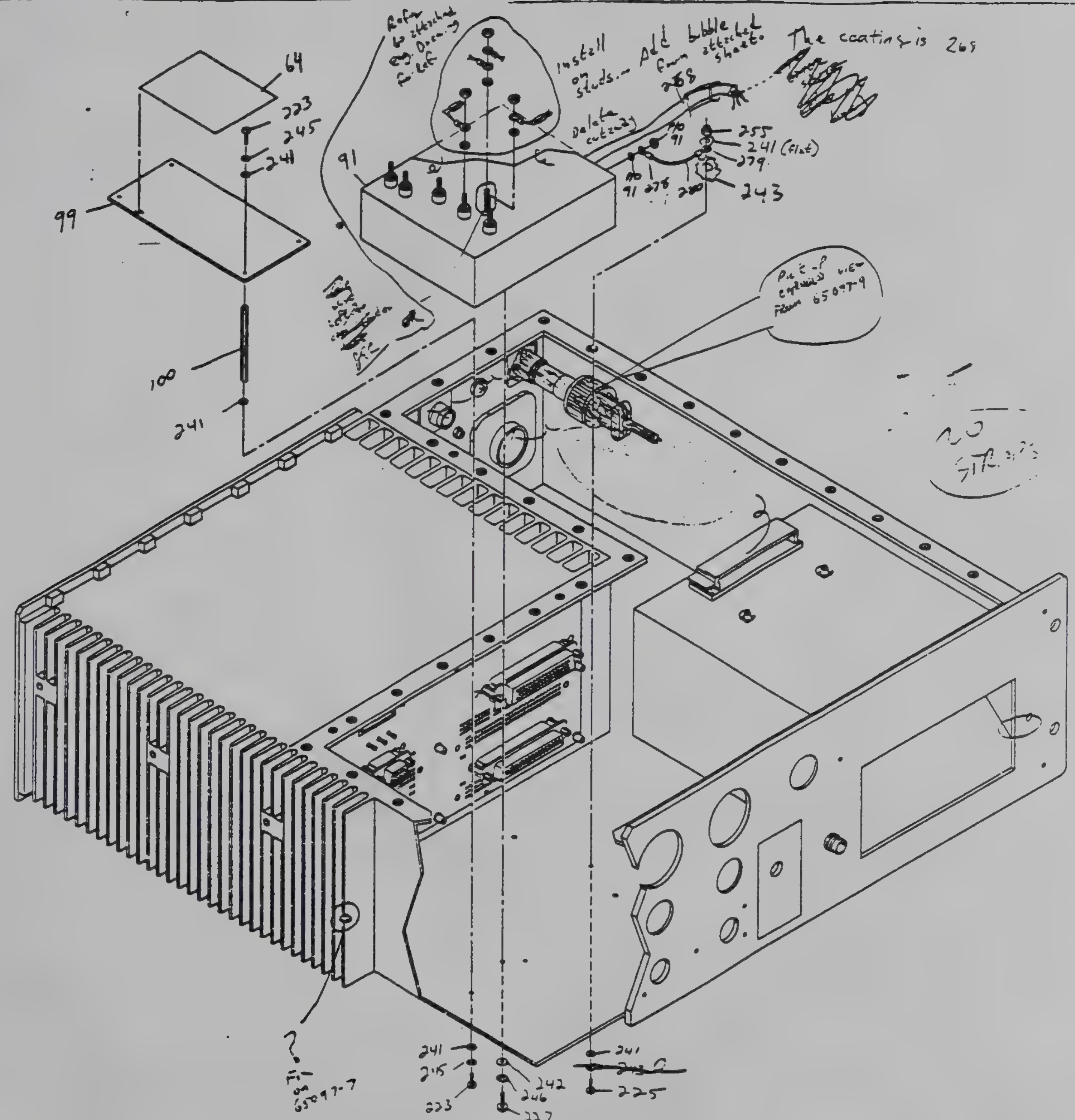

64
223
245
241
99
100
241
91
Refer to attached eng. Drawing for Ref
Install on studs.
Add bubble from attached sheet.
The coating is
Delete cutaway
258
255
241 (flat)
279
243
Pick up exploded view from 65097-9
?
241
223
242
246
227
241
225

65100 - 5

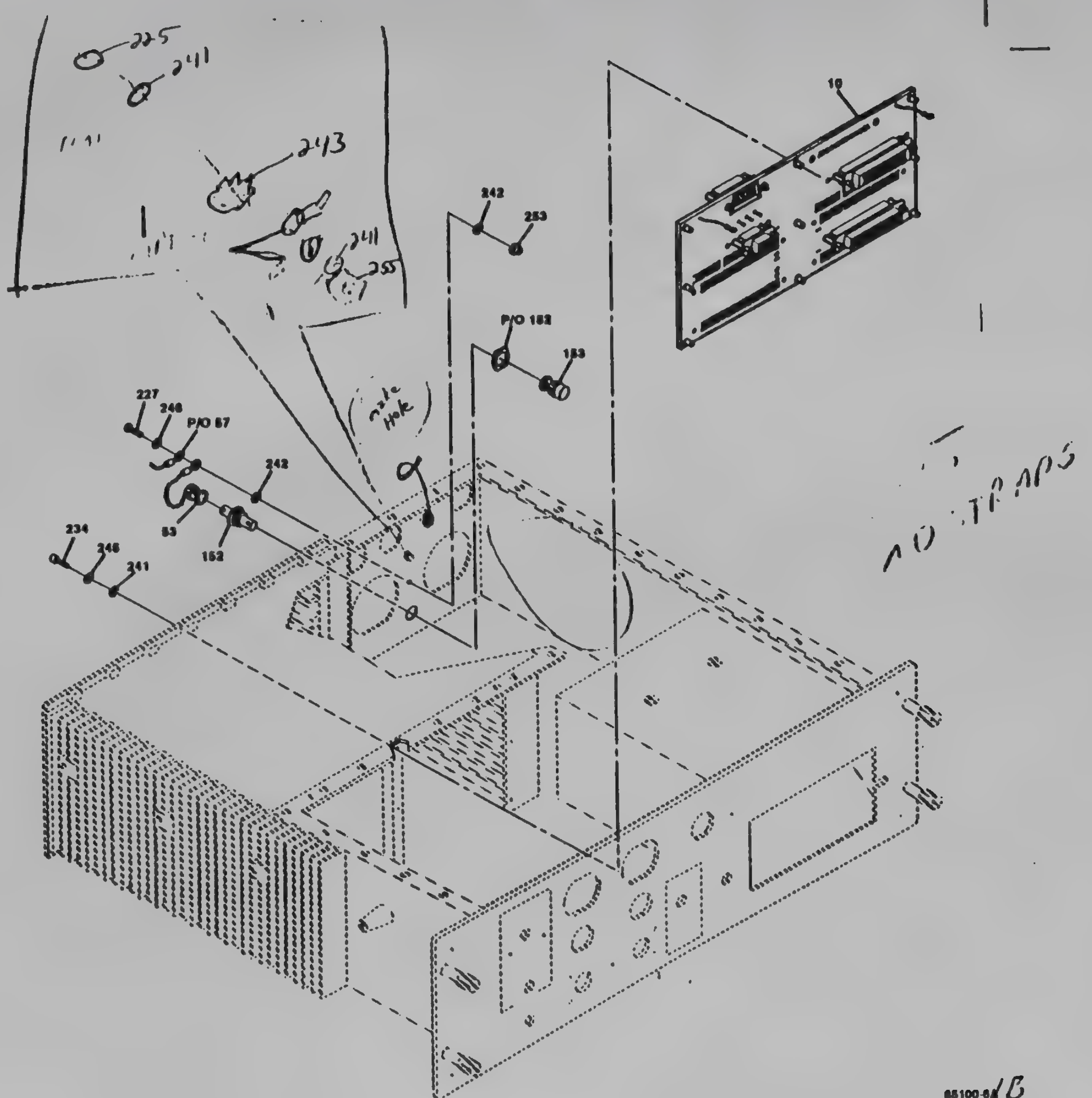
10
242
253
P/O 182
183
227
246
P/O 87
242
83
152
234
246
341
225
241
243
241
255
NO TRAPS

85100-8/B

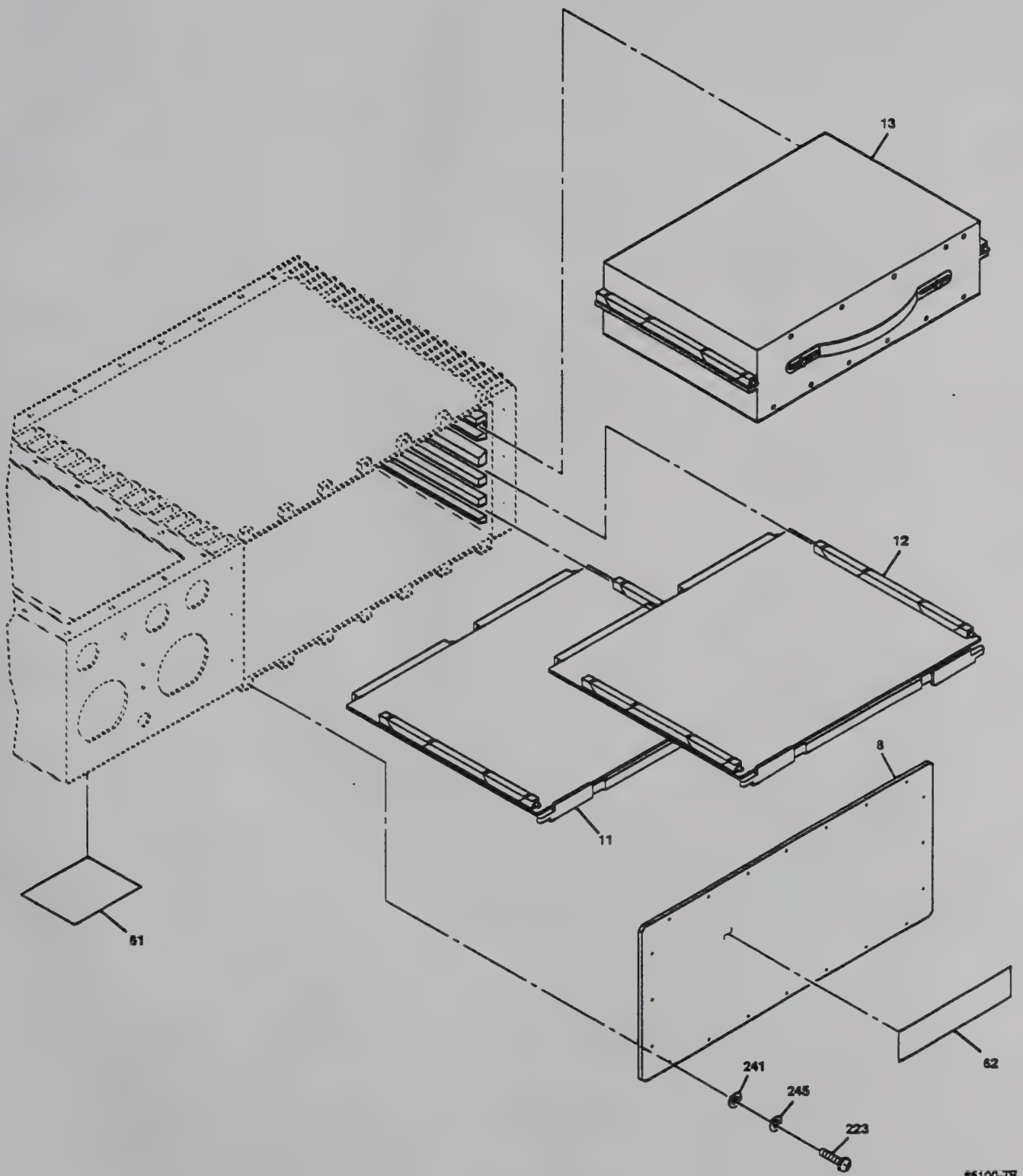
13
12
8
11
61
62
241
245
223
65100-7B

(1) Item No	(2) SMR Code	(3) FSCM	(4) Part Number	(5) Description and Usable on Code (UOC)	(6) Qty

Figure 2 data

65101-1

Figure 3. CCA, Motherboard (Sheet 1 of 3)

65101-2

Figure 3. CCA, Motherboard (Sheet 2 of 3)

REF DES	ITEM NO.	REF DES	ITEM NO.	REF DES	ITEM NO.	REF DES	ITEM NO.	REF DES	ITEM NO.
C1	1	E3		R1	7	R6		XA2J2	9
THRU		J1	3	R2	8	R7	7	XA4J1	9
C9		J2	4	R3	7	THRU		XA4J2	10
E1	2	J3	5	R4	8	R9		XPS1J1	11
THRU		J4	6	THRU		XA2J1	9	XPS1J2	12

Figure 3. CCA, Motherboard (Sheet 3 of 3)

(1) Item No	(2) SMR Code	(3) FSCM	(4) Part Number	(5) Description and Usable on Code (UOC)	(6) Qty

Figure 3 data

65103-1

Figure 4. CCA, Audio (Sheet 1 of 9)

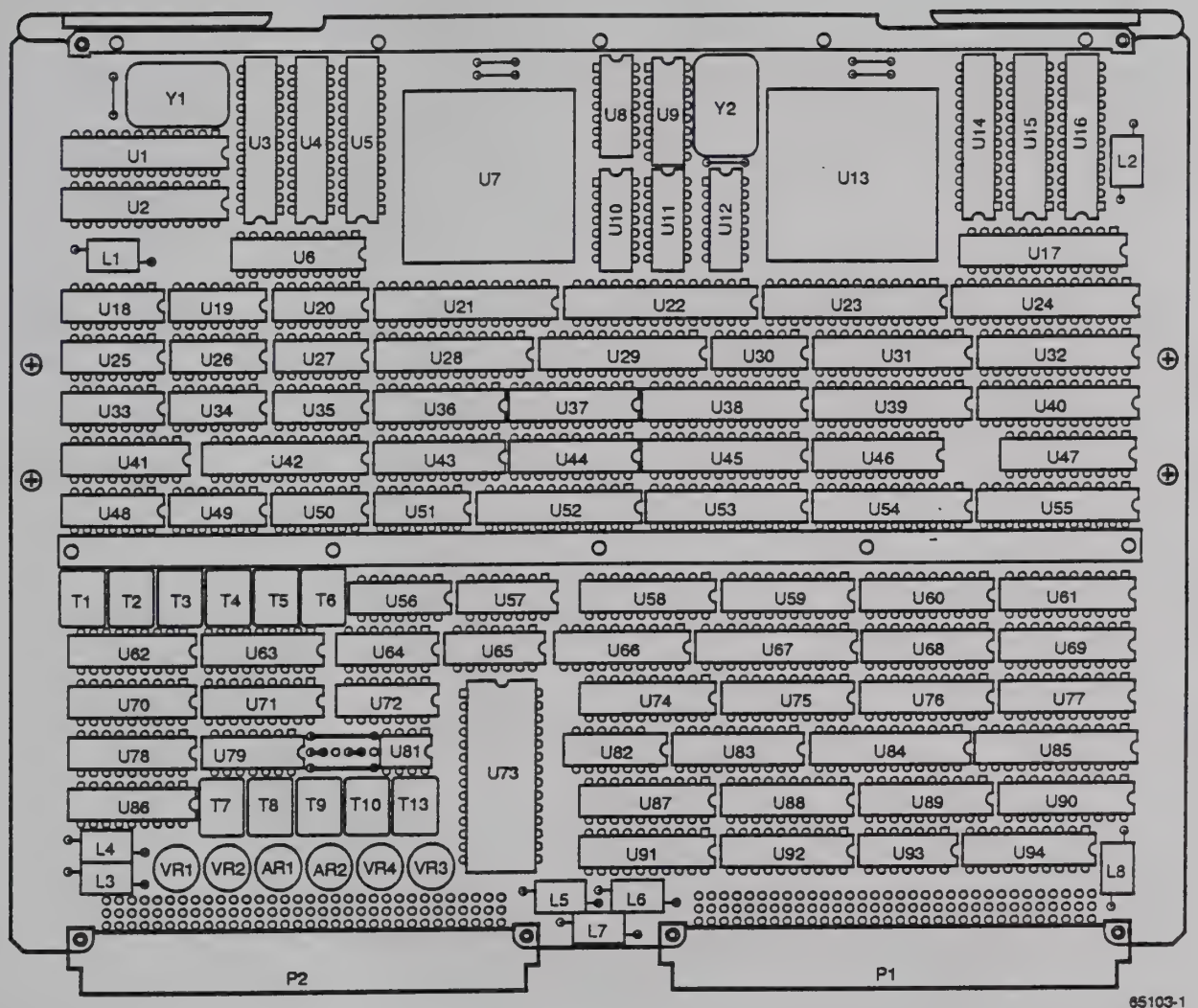
Y1
U1
U2
U3
U4
U5
U6
U7
U8
U9
Y2
U10
U11
U12
U13
U14
U15
U16
L1
L2
U17
U18
U19
U20
U21
U22
U23
U24
U25
U26
U27
U28
U29
U30
U31
U32
U33
U34
U35
U36
U37
U38
U39
U40
U41
U42
U43
U44
U45
U46
U47
U48
U49
U50
U51
U52
U53
U54
U55
T1
T2
T3
T4
T5
T6
U56
U57
U58
U59
U60
U61
U62
U63
U64
U65
U66
U67
U68
U69
U70
U71
U72
U73
U74
U75
U76
U77
U78
U79
U81
U82
U83
U84
U85
U86
T7
T8
T9
T10
T13
U87
U88
U89
U90
L4
L3
VR1
VR2
AR1
AR2
VR4
VR3
U91
U92
U93
U94
L8
L5
L6
L7
P2
P1
65103-1

65103-2

Figure 4. CCA, Audio (Sheet 2 of 9)

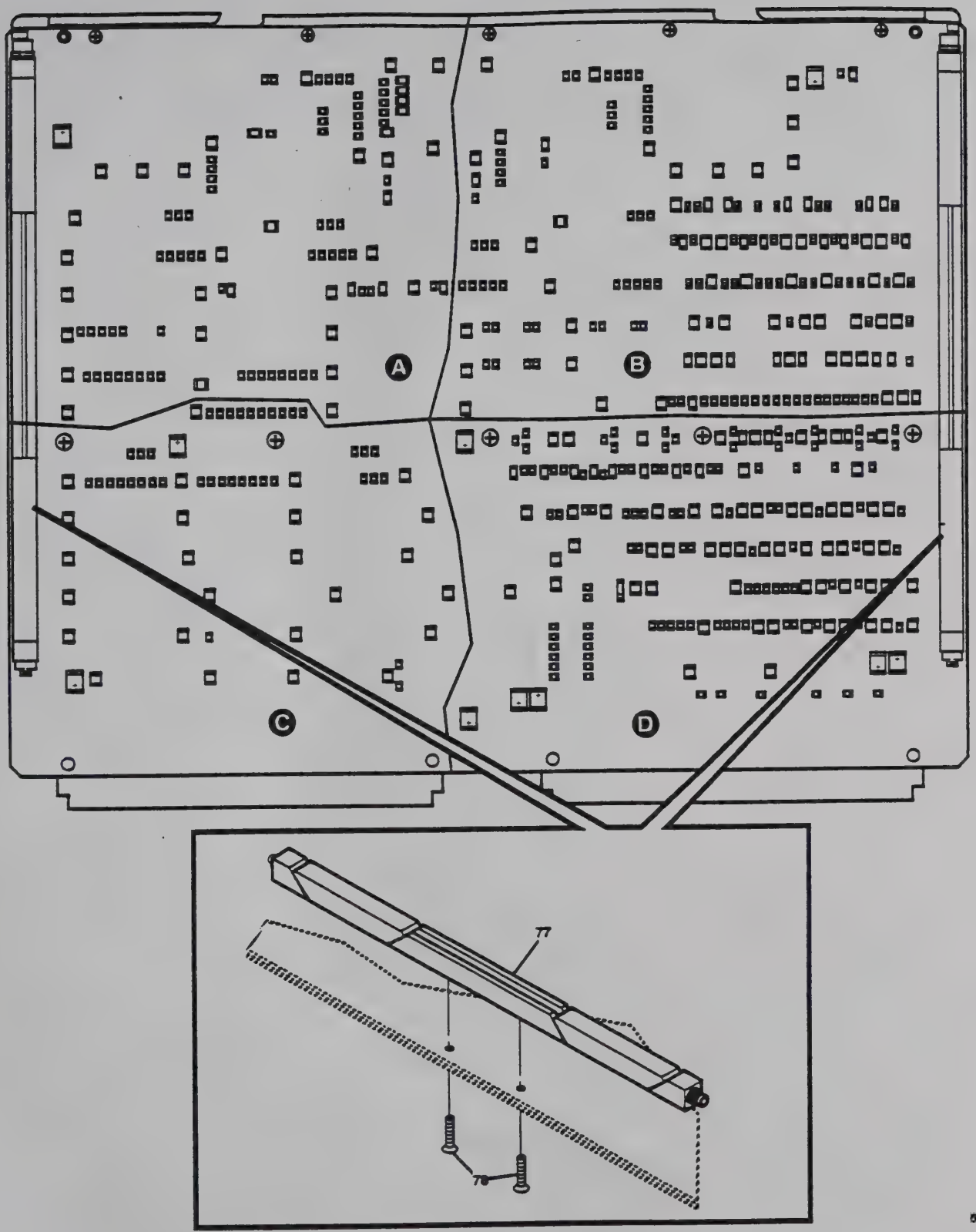

65103-2A

65103-3

Figure 4. CCA, Audio (Sheet 3 of 9)

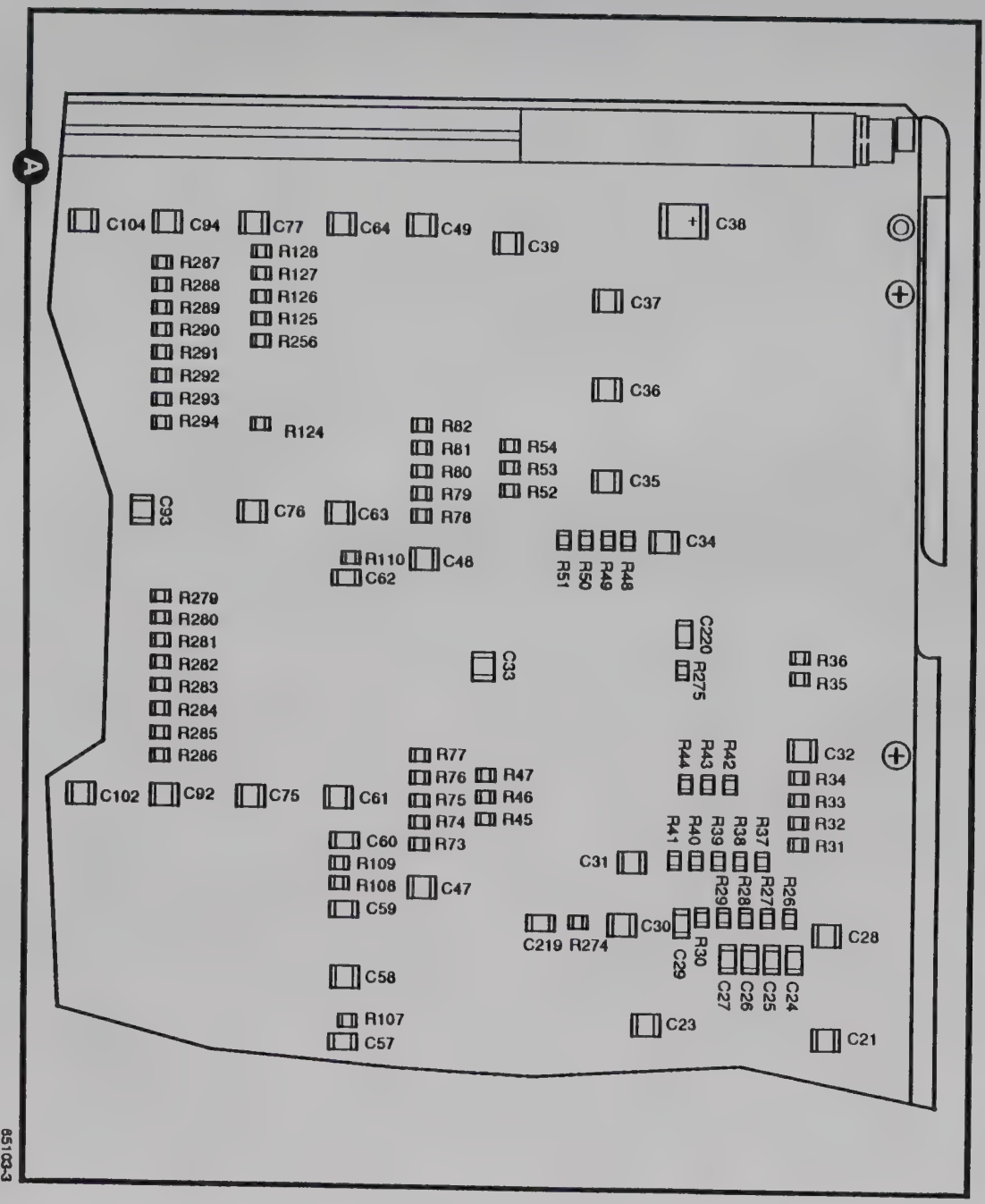
A
C104
C94
C77
C64
C49
C39
C38
R287
R288
R289
R290
R291
R292
R293
R294
R128
R127
R126
R125
R256
C37
C36
R124
R82
R81
R80
R79
R78
R54
R53
R52
C35
C93
C76
C63
C34
R110
C48
C62
R51
R50
R49
R48
R279
R280
R281
R282
R283
R284
R285
R286
C220
R275
C33
R36
R35
R77
R76
R75
R74
R47
R46
R45
R44
R43
R42
C32
R34
R33
R32
R31
C102
C92
C75
C61
C60
R109
R108
C59
R73
C47
R41
R40
R39
R38
R37
C31
R29
R28
R27
R26
C219
R274
C30
R30
C29
C28
C58
C27
C26
C25
C24
R107
C57
C23
C21
651023-3

65103-4

Figure 4. CCA, Audio (Sheet 4 of 9)

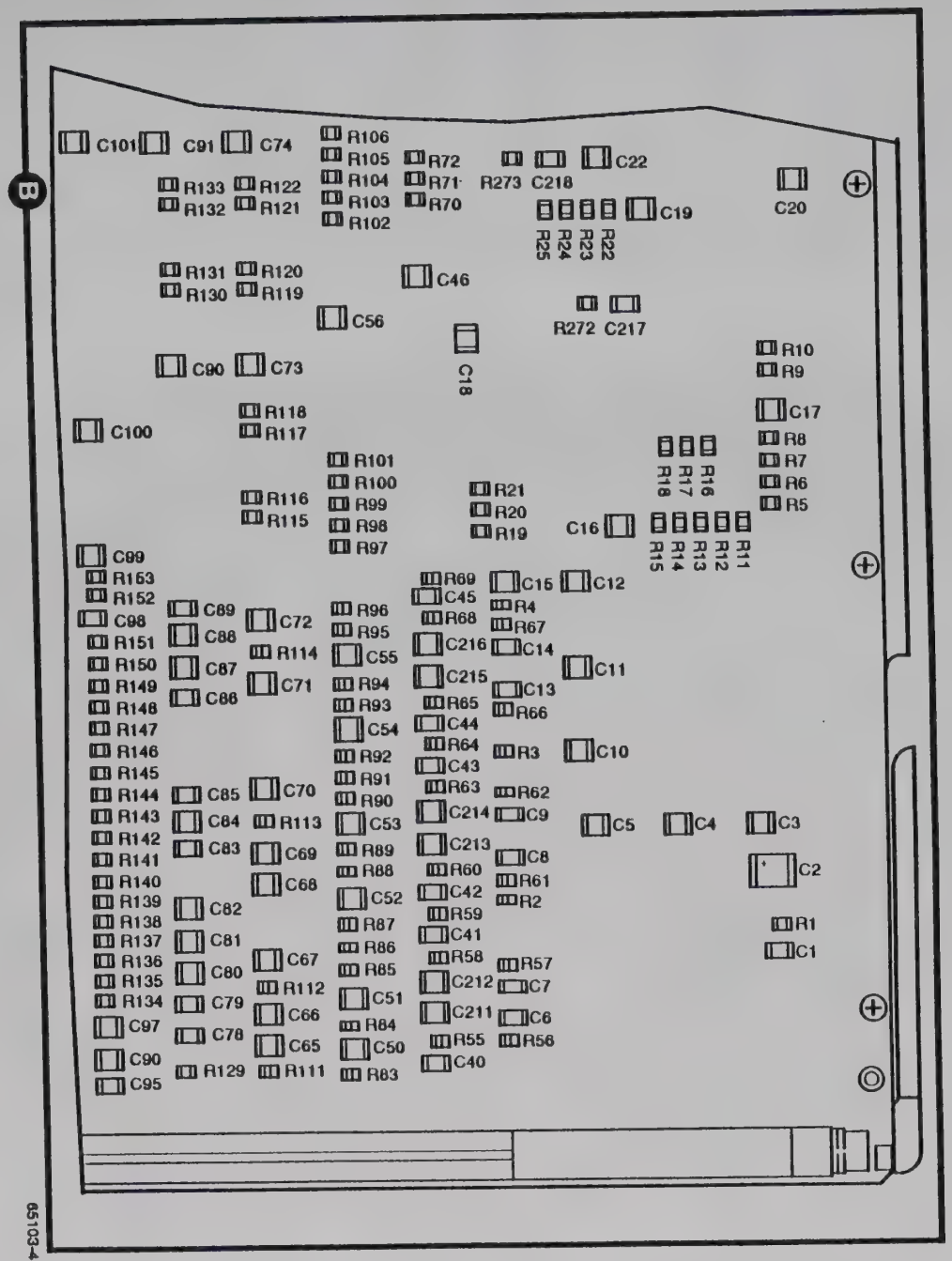
B
C101 C91 C74
R106 R105 R104 R103 R102
R72 R71 R70
R273 C218
C22
C19
C20
R25 R24 R23 R22
R133 R132 R122 R121
R131 R130 R120 R119
C46
C56
R272 C217
C18
C90 C73
R10 R9
C17
R8 R7 R6 R5
C100
R118 R117
R101 R100 R99 R98 R97
R21 R20 R19
C16
R18 R17 R16 R15 R14 R13 R12 R11
R116 R115
C99 R153 R152 C98 R151 R150 R149 R148 R147 R146 R145 R144 R143 R142 R141 R140 R139 R138 R137 R136 R135 R134 C97 C90 C95
C89 C88 C87 C86
C72 R114 C71
R96 R95 C55 R94 R93 C54 R92 R91 R90 C53 R89 R88 C52 R87 R86 R85 C51 R84 C50 R83
R69 C45 R68 C216 C215 R65 C44 R64 C43 R63 C214 C213 R60 C42 R59 C41 R58 C212 C211 R55 C40
C15 C12
R4 R67 C14
C11
C13 R66
R3 C10
R62 C9
C5 C4 C3
C8 R61 R2
C2
R1 C1
R57 C7 C6 R56
C85 C84 C83
C70 R113 C69 C68
C82 C81 C80 C79 C78
C67 R112 C66 C65 R129 R111
65103-4

65103-5

Figure 4. CCA, Audio (Sheet 5 of 9)

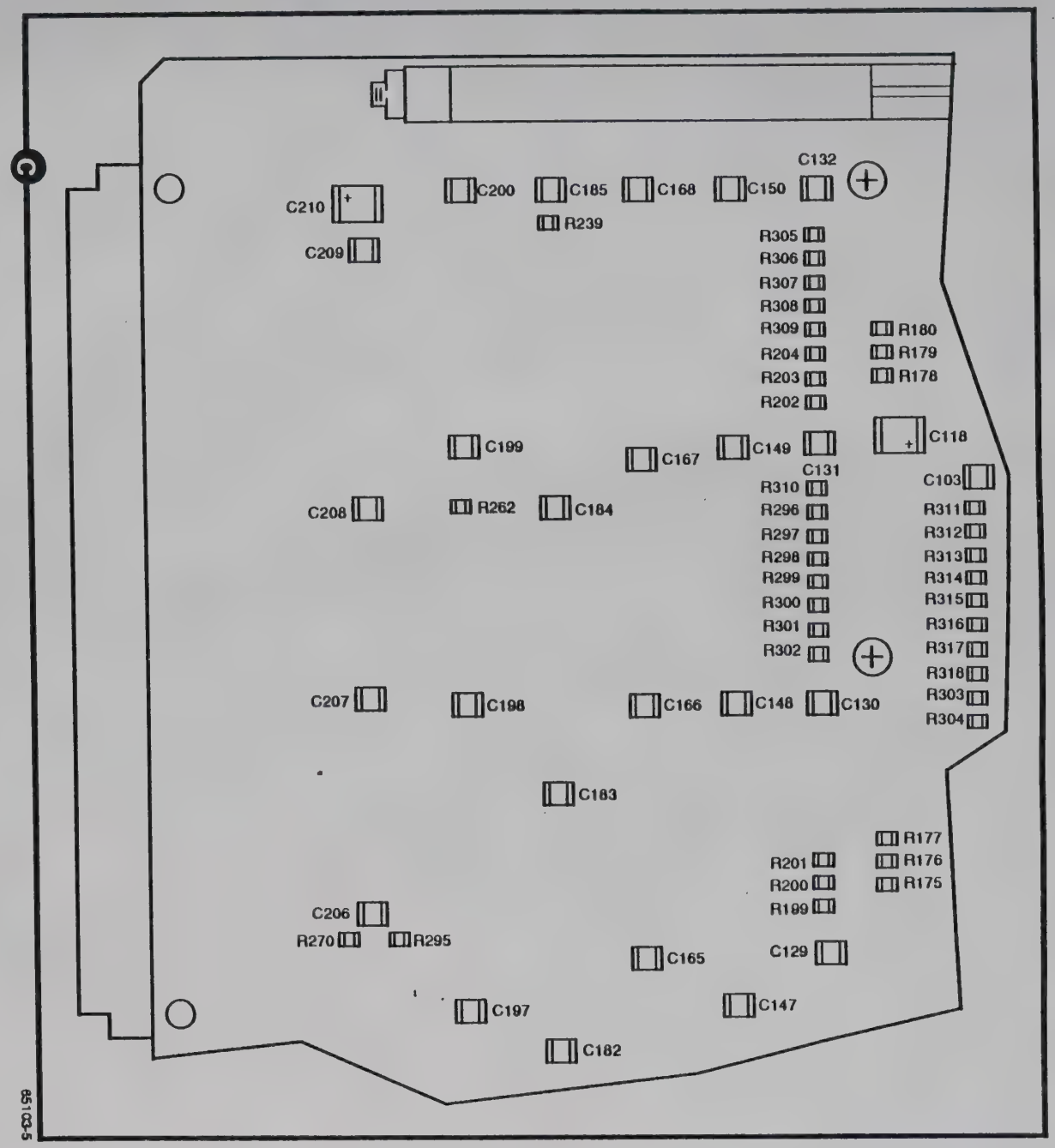
C132
C210
C200
C185
C168
C150
R239
C209
R305
R306
R307
R308
R309
R204
R203
R202
R180
R179
R178
C118
C199
C167
C149
C131
C103
C208
R262
C184
R310
R296
R297
R298
R299
R300
R301
R302
R311
R312
R313
R314
R315
R316
R317
R318
R303
R304
C207
C198
C166
C148
C130
C183
R177
R176
R175
R201
R200
R199
C206
R270
R295
C165
C129
C197
C147
C182
65102-5

65103-6

Figure 4. CCA, Audio (Sheet 6 of 9)

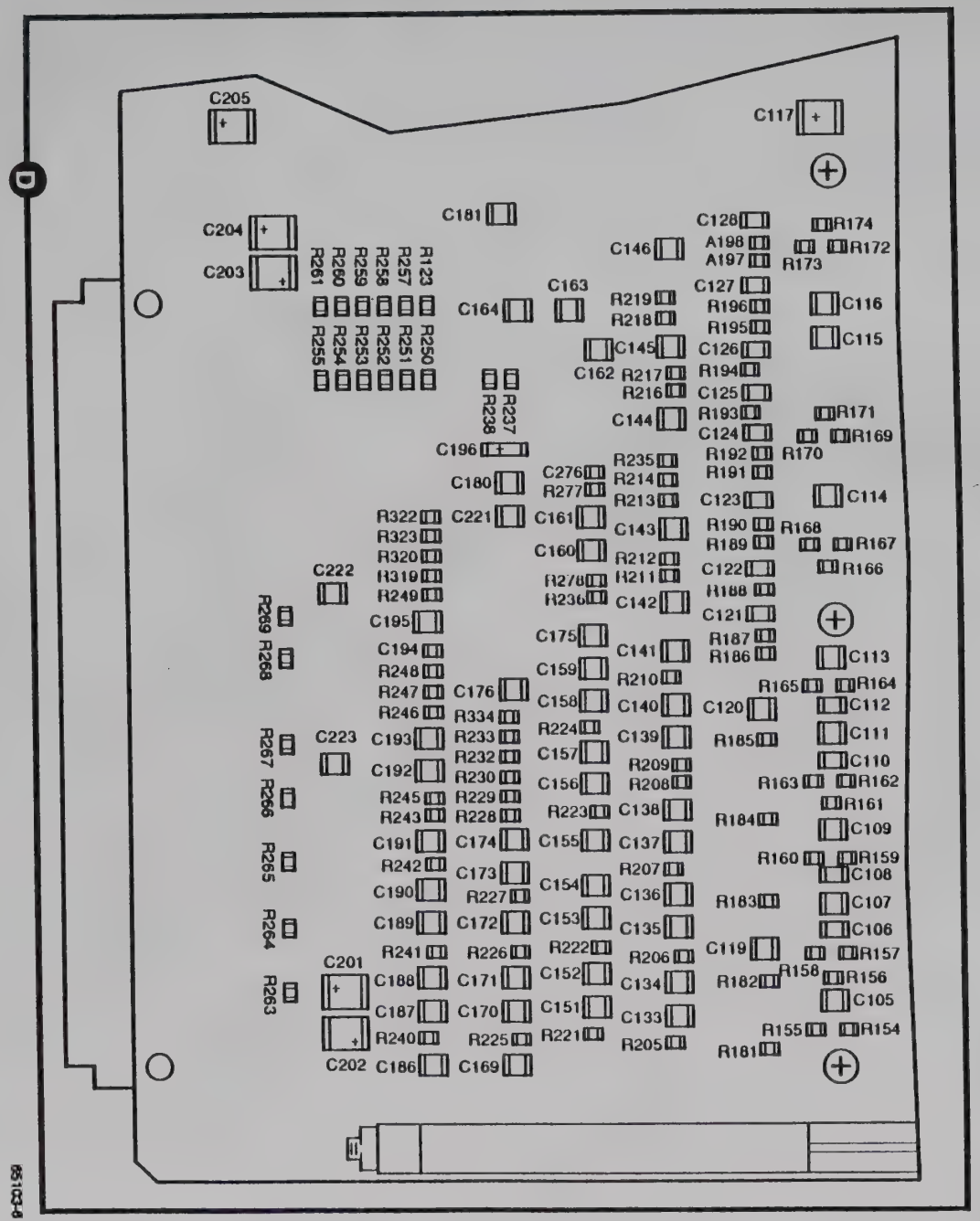
D
C205
C204
C203
C181
C164
C163
C146
C145
C162
C144
C196
C180
C221
C161
C143
C160
C142
C222
C195
C175
C141
C159
C158
C140
C176
C223
C157
C139
C156
C138
C174
C155
C137
C173
C154
C136
C172
C153
C135
C201
C188
C171
C152
C134
C187
C170
C151
C133
C240
C202
C186
C169
C221
C205
C117
C128
C146
C127
C145
C126
C144
C125
C124
C123
C143
C122
C142
C121
C141
C140
C120
C139
C138
C137
C136
C135
C134
C133
C119
C116
C115
C114
C113
C112
C111
C110
C109
C108
C107
C106
C105
R174
R172
R173
R171
R169
R170
R168
R167
R166
R165
R164
R163
R162
R161
R160
R159
R158
R157
R156
R155
R154
R123
R250
R251
R252
R253
R254
R255
R257
R258
R259
R260
R261
R237
R238
R235
R214
R213
R212
R211
R210
R209
R208
R207
R206
R205
R276
R277
R278
R236
R224
R223
R222
R221
R322
R323
R320
R319
R249
R248
R247
R246
R334
R233
R232
R230
R229
R228
R227
R226
R225
R269
R268
R267
R266
R265
R264
R263
R219
R218
R217
R216
R196
R195
R194
R193
R192
R191
R190
R189
R188
R187
R186
R185
R184
R183
R182
R181
A198
A197
R240
R241
R242
R243
R245
R210
R224
R209
R208
R223
R207
R206
R205
R221
R222
R227
R226
R225
R240
R241
R242
R243
R245
R246
R247
R248
R249
R319
R320
R322
R323
R334
R233
R232
R230
R229
R228
R227
R226
R225
R221
R222
R223
R224
R276
R277
R278
R236
R235
R214
R213
R212
R211
R210
R209
R208
R207
R206
R205
R219
R218
R217
R216
R196
R195
R194
R193
R192
R191
R190
R189
R188
R187
R186
R185
R184
R183
R182
R181
R123
R250
R251
R252
R253
R254
R255
R257
R258
R259
R260
R261
R237
R238
R269
R268
R267
R266
R265
R264
R263
R174
R172
R173
R171
R169
R170
R168
R167
R166
R165
R164
R163
R162
R161
R160
R159
R158
R157
R156
R155
R154
C116
C115
C114
C113
C112
C111
C110
C109
C108
C107
C106
C105
C117
C128
C146
C127
C145
C126
C144
C125
C124
C123
C143
C122
C142
C121
C141
C140
C120
C139
C138
C137
C136
C135
C134
C133
C119
C181
C164
C163
C162
C196
C180
C221
C161
C160
C222
C195
C175
C159
C158
C176
C223
C157
C156
C174
C155
C173
C154
C172
C153
C201
C188
C171
C152
C187
C170
C151
C240
C202
C186
C169
C205
C204
C203
65103-6

65103-7

Figure 4. CCA, Audio (Sheet 7 of 9)

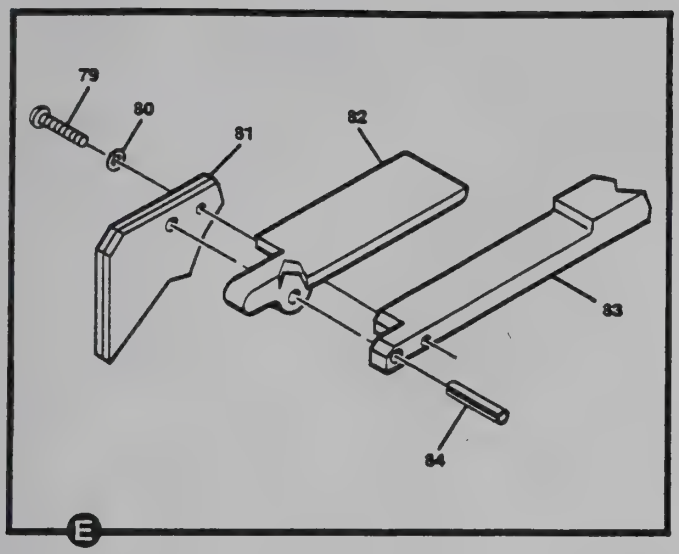
79
80
81
82
83
84
E

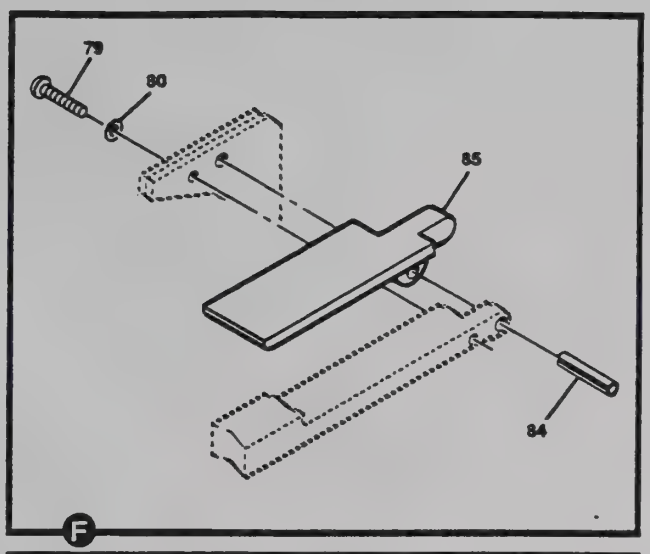
79
80
85
84
F

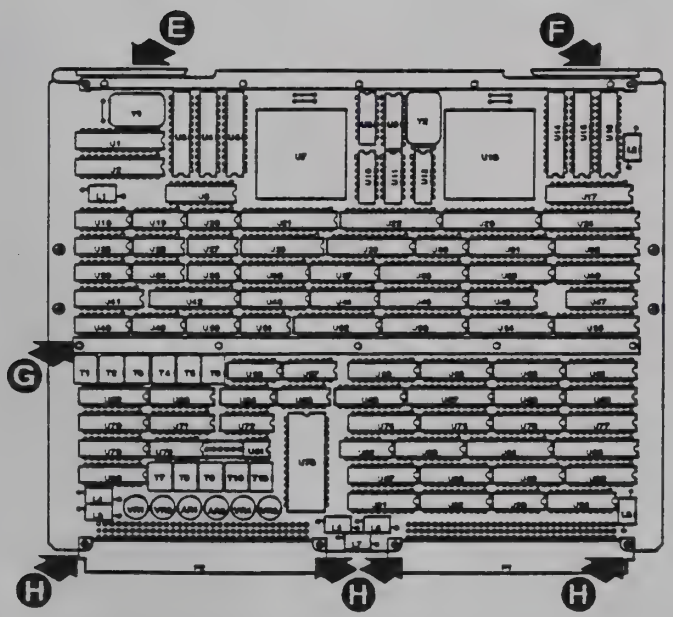
E
F
G
H
H
H

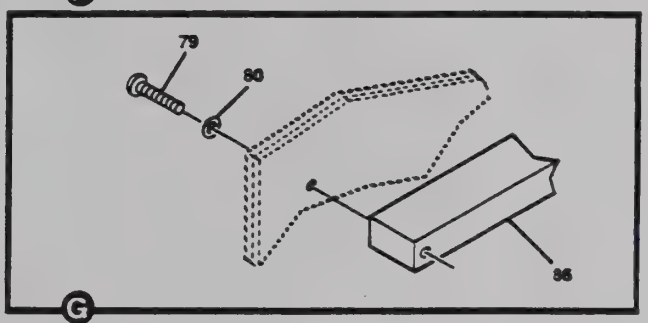
79
80
86
G

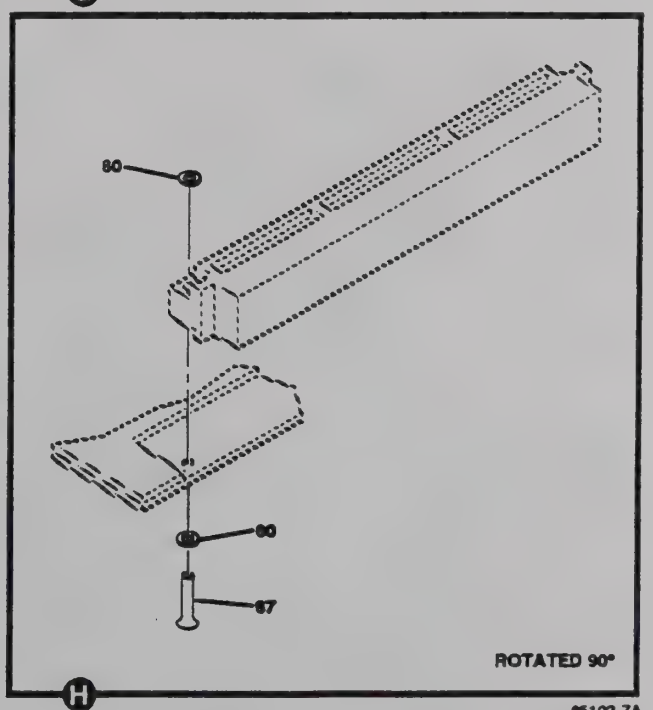
80
80
87
ROTATED 90°
H

85103-7A

65103-8

Figure 4. CCA, Audio (Sheet 8 of 9)

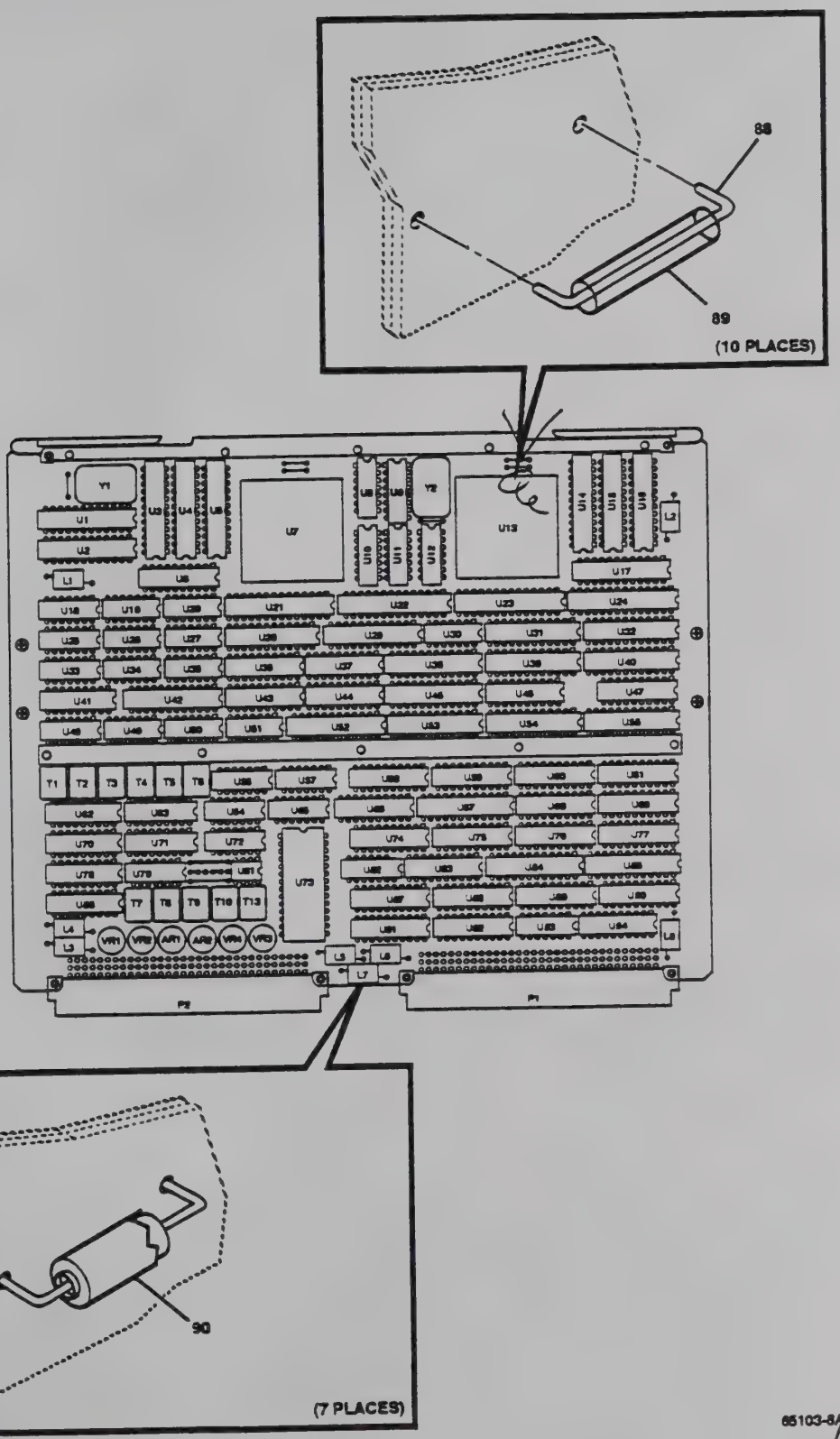
88
89
(10 PLACES)
90
(7 PLACES)

REF DES	ITEM NO.	REF DES	ITEM NO.	REF DES	ITEM NO.	REF DES	ITEM NO.	REF DES	ITEM NO.	REF DES	ITEM NO.	REF DES	ITEM NO.	REF DES	ITEM NO.
AR1	1	C85	5	C195	4	R70	14	R157	16	R221	21	T13	29	U51	59
AR2	1	C86	5	C196	9	THRU		THRU		THRU		U1	30	U52	60
C1	2	C87	4	C197	4	R82		R159		R227		U2	31	U53	61
C2	3	C88	4	THRU		R83	16	R160	15	R228	22	U3	32	U54	60
C3	4	C89	5	C200		R84	15	R161	17	R229	16	U4	33	U55	62
THRU		C90	4	C201	3	R85	16	R162	16	R230	21	U5	34	U56	44
C5		THRU		C202	3	THRU		THRU		R232	15	U6	35	U57	44
C6	5	C94		C203	10	R87		R164		R233	15	U7	36	U58	57
THRU		C95	6	C204	10	R88	15	R165	15	R234	23	U8	37	THRU	
C9		C96	4	C205	3	R89	16	R166	17	R235	24	U9	38	U61	
C10	4	C97	4	C206	4	THRU		R167	16	R236	24	U10	39	U62	63
THRU		C98	6	THRU		R92		R168	16	R237	14	U11	37	U63	63
C12		C99	4	C209		R93	15	R169	18	THRU		U12	39	U64	46
C13	5	THRU		C210	3	R94	16	R170	16	R239		U13	36	U65	46
C14	5	C105		C211	4	THRU		R171	15	R240	21	U14	40	U66	64
C15	4	C106	6	THRU		R96		R172	18	R241	21	U15	41	U67	65
THRU		C107	4	C216		R97	14	R173	16	R242	23	U16	42	U68	64
C23		C108	6	C217	2	THRU		R174	15	R243	15	U17	43	U69	64
C24	2	C109	4	THRU		R106		R175	14	R245	15	U18	44	U70	63
THRU		C110	6	C220		R107	13	THRU		R246	21	THRU		U71	63
C27		C111	4	C221	4	THRU		R180		R247	16	U20		U72	46
C28	4	C112	6	THRU		R110		R181	15	R248	22	U21	45	U73	66
C29	2	C113	4	C223		R111	16	THRU		R249	21	THRU		U74	64
C30	4	THRU		L1	11	R112	17	R186		R250	14	U24		THRU	
THRU		C116		THRU		THRU		R187	19	THRU		U25	46	U77	
C37		C117	3	L8		R114		R188	20	R262		THRU		U78	63
C38	3	C118	3	P1	12	R115	14	R189	15	R263	25	U27		U79	46
C39	4	C119	4	P2	12	THRU		THRU		THRU		U28	47	U81	67
C40	6	C120	4	R1	13	R128		R191		R269		U29	48	U82	68
THRU		C121	5	R5	14	R129	16	R192	16	R270	14	U30	49	U83	69
C45		C122	6	THRU		R130	14	R193	19	R272	13	U31	50	U84	70
C46	4	C123	5	R25		THRU		R194	20	THRU		U32	51	U85	71
THRU		C124	7	R26	13	R133		R195	15	R275		U33	44	U86	63
C56		C125	5	THRU		R134	15	THRU		R276	24	THRU		U87	69
C57	2	C126	6	R30		THRU		R197		R277	16	U35		U88	72
C58	4	C127	5	R31	14	R137		R198	16	R278	16	U36	52	U89	64
C59	2	C128	7	THRU		R138	16	R199	14	R279	14	U37	52	U90	72
C60	2	C129	4	R54		R140	16	THRU		THRU		U38	53	U91	72
C61	4	THRU		R55	15	R141	15	R204		R318		U39	54	U92	73
C62	2	C173		THRU		THRU		R205	21	R319	26	U40	54	U93	68
C63	4	C174	5	R58		R144		THRU		R320	15	U41	55	U94	69
THRU		C175	4	R59	16	R145	16	R210		R322	26	U42	56	VR1	74
C77		C176	8	R60	15	R147	16	R211	17	R323	15	U43	57	THRU	
C78	5	C180	4	THRU		R148	15	R212	16	T1	27	U44	57	VR4	
C79	5	THRU		R63		THRU		R213	21	THRU		U45	58	Y1	75
C80	4	C190		R64	16	R151		R214	16	T6		U46	57	Y2	76
THRU		C191	8	R65	15	R152	16	R216	17	T7	28	U47	57		
C82		C192	4	THRU		R154	16	R217	16	T8	28	U48	46		
C83	5	C193	4	R68		R155	15	R218	21	T9	29	THRU			
C84	4	C194	5	R69	16	R156	17	R219	16	T10	29	U50			

Figure 4. CCA, Audio (Sheet 9 of 9)

(1) Item No	(2) SMR Code	(3) FSCM	(4) Part Number	(5) Description and Usable on Code (UOC)	(6) Qty

Figure 4 data

65104-1

Figure 5. CCA, CP (Sheet 1 of 9)

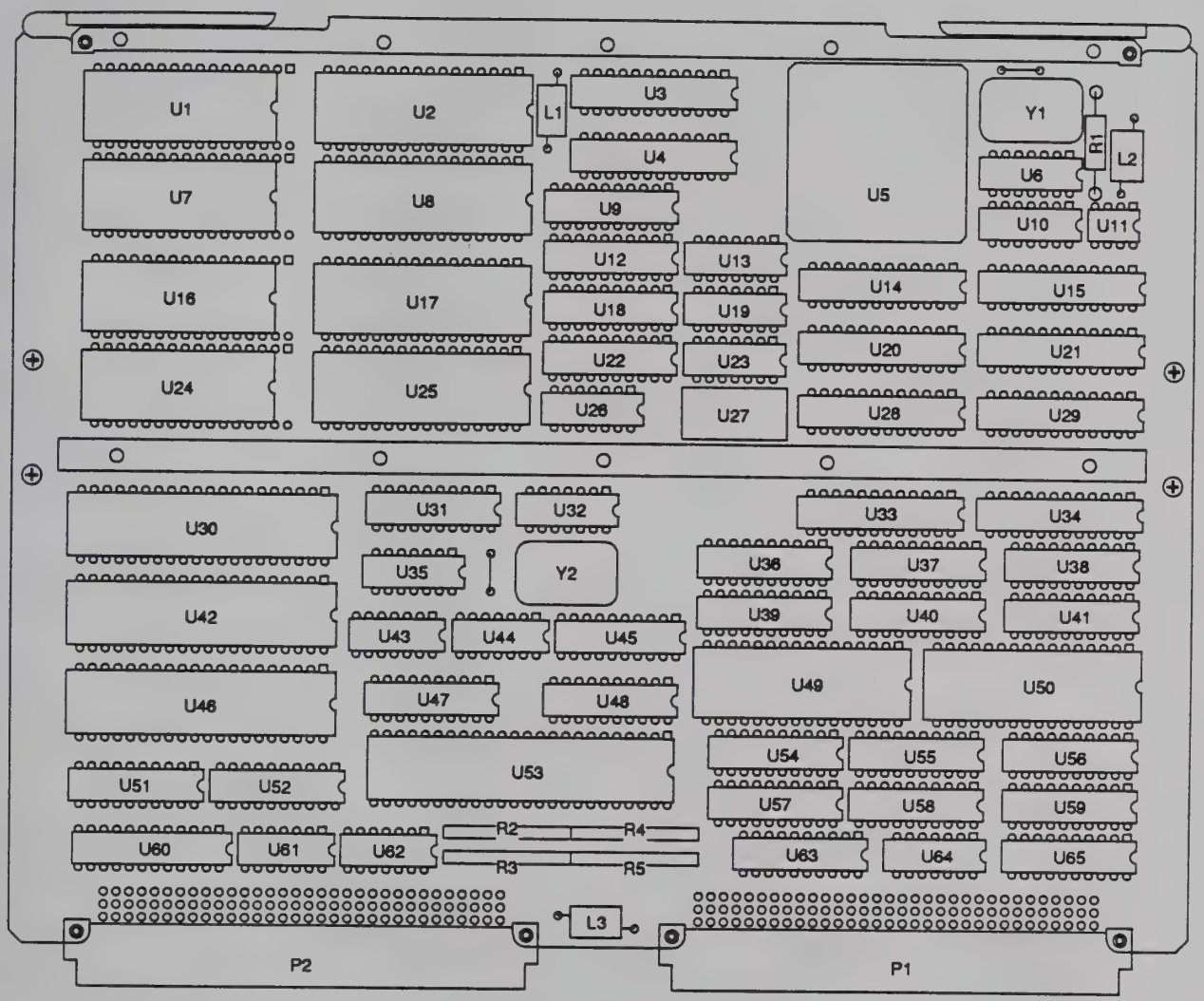
U1
U2
L1
U3
U4
U5
Y1
R1
L2
U6
U7
U8
U9
U10
U11
U12
U13
U14
U15
U16
U17
U18
U19
U20
U21
U22
U23
U24
U25
U26
U27
U28
U29
U30
U31
U32
U33
U34
U35
Y2
U36
U37
U38
U39
U40
U41
U42
U43
U44
U45
U46
U47
U48
U49
U50
U51
U52
U53
U54
U55
U56
U57
U58
U59
U60
U61
U62
R2
R4
R3
R5
U63
U64
U65
L3
P2
P1

85104-1

65104-2

Figure 5. CCA, CP (Sheet 2 of 9)

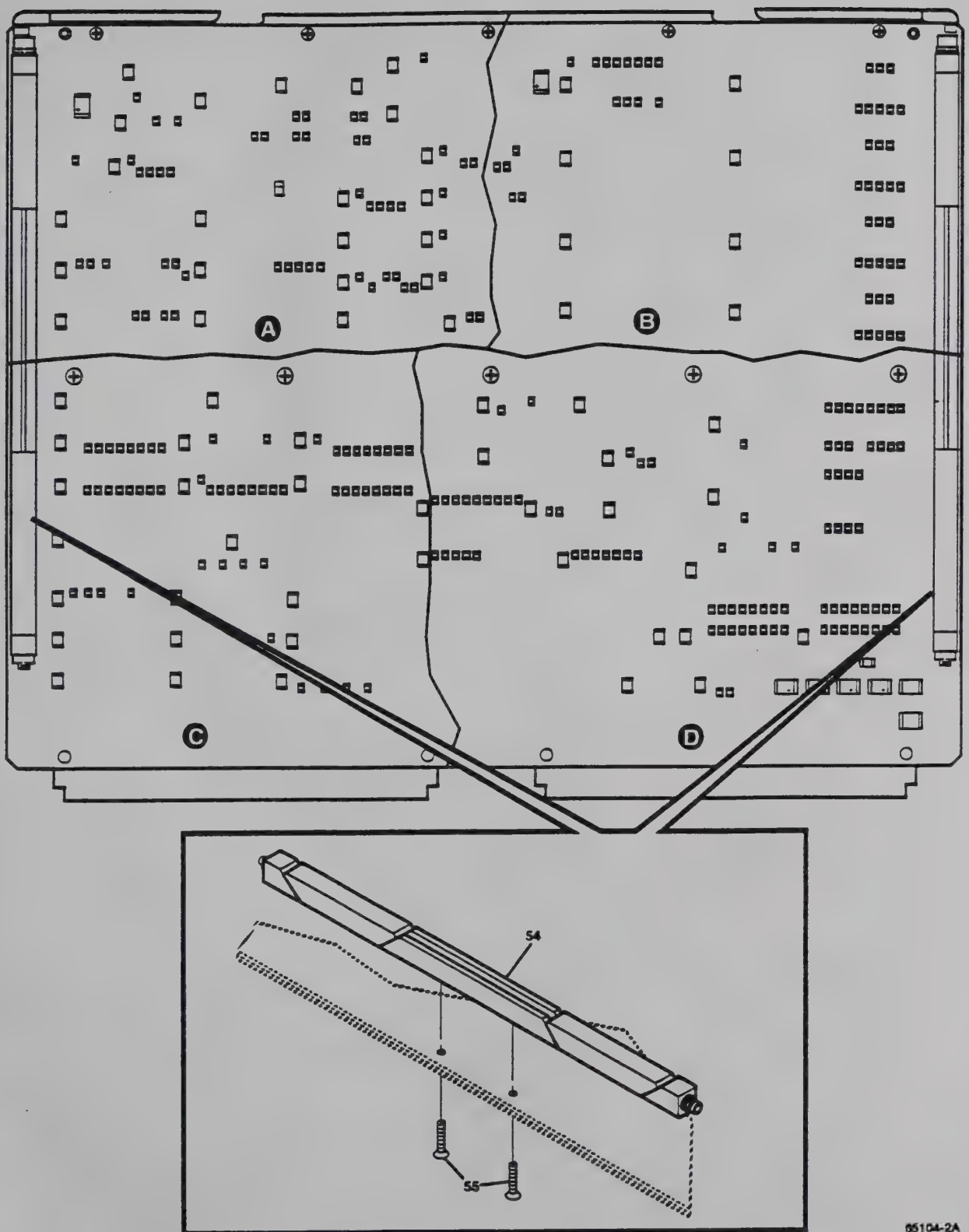

65104-2A

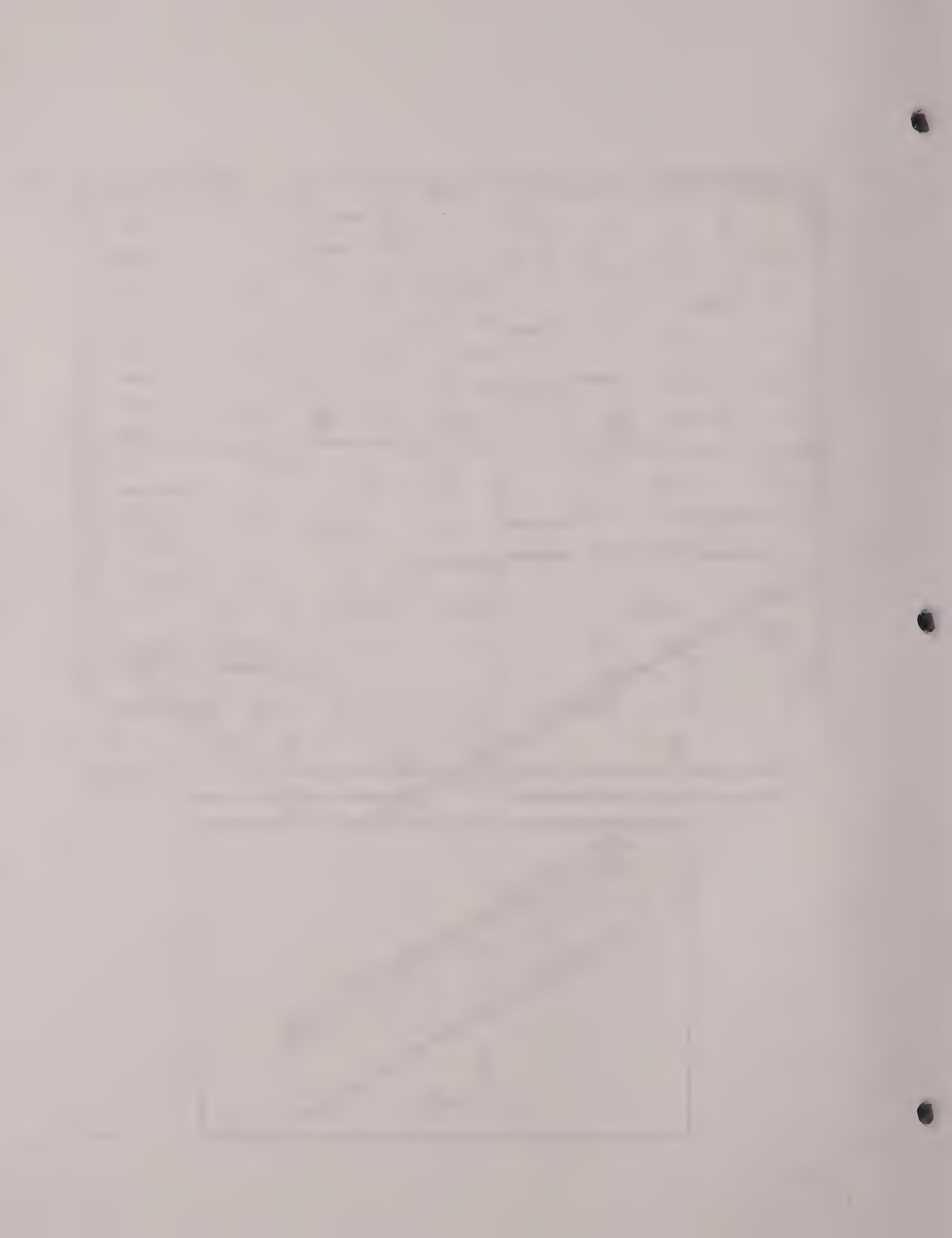

65104-3

Figure 5. CCA, CP (Sheet 3 of 9)

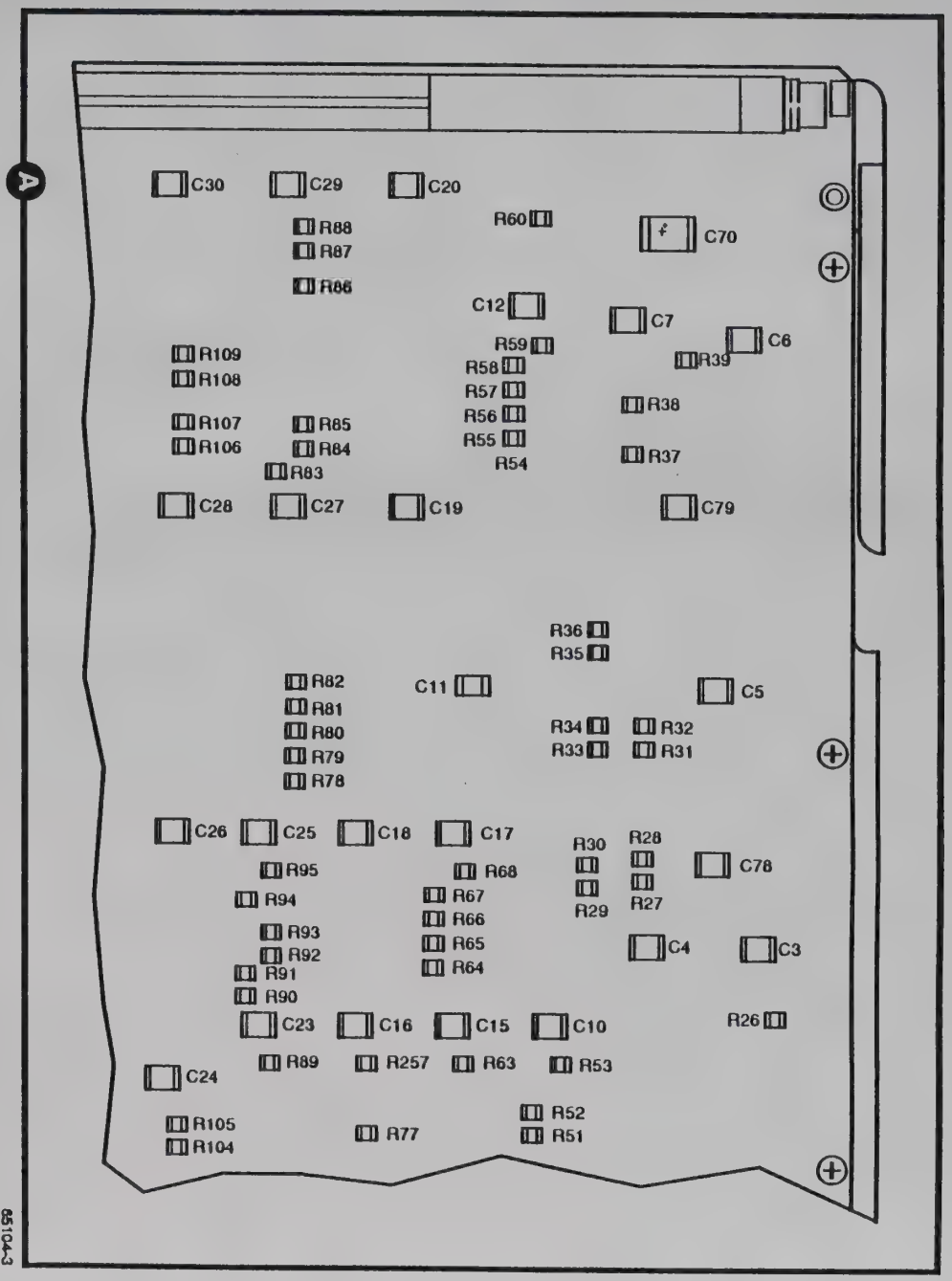
A
C30
C29
C20
R60
R88
R87
R86
C70
C12
C7
C6
R59
R58
R57
R56
R55
R54
R39
R38
R37
R109
R108
R107
R106
R85
R84
R83
C28
C27
C19
C79
R36
R35
R82
R81
R80
R79
R78
C11
C5
R34
R33
R32
R31
C26
C25
C18
C17
R30
R29
R28
R27
C78
R95
R94
R93
R92
R91
R90
R68
R67
R66
R65
R64
C4
C3
C23
C16
C15
C10
R26
R89
R257
R63
R53
C24
R105
R104
R77
R52
R51
65104-3

65104-4

Figure 5. CCA, CP (Sheet 4 of 9)

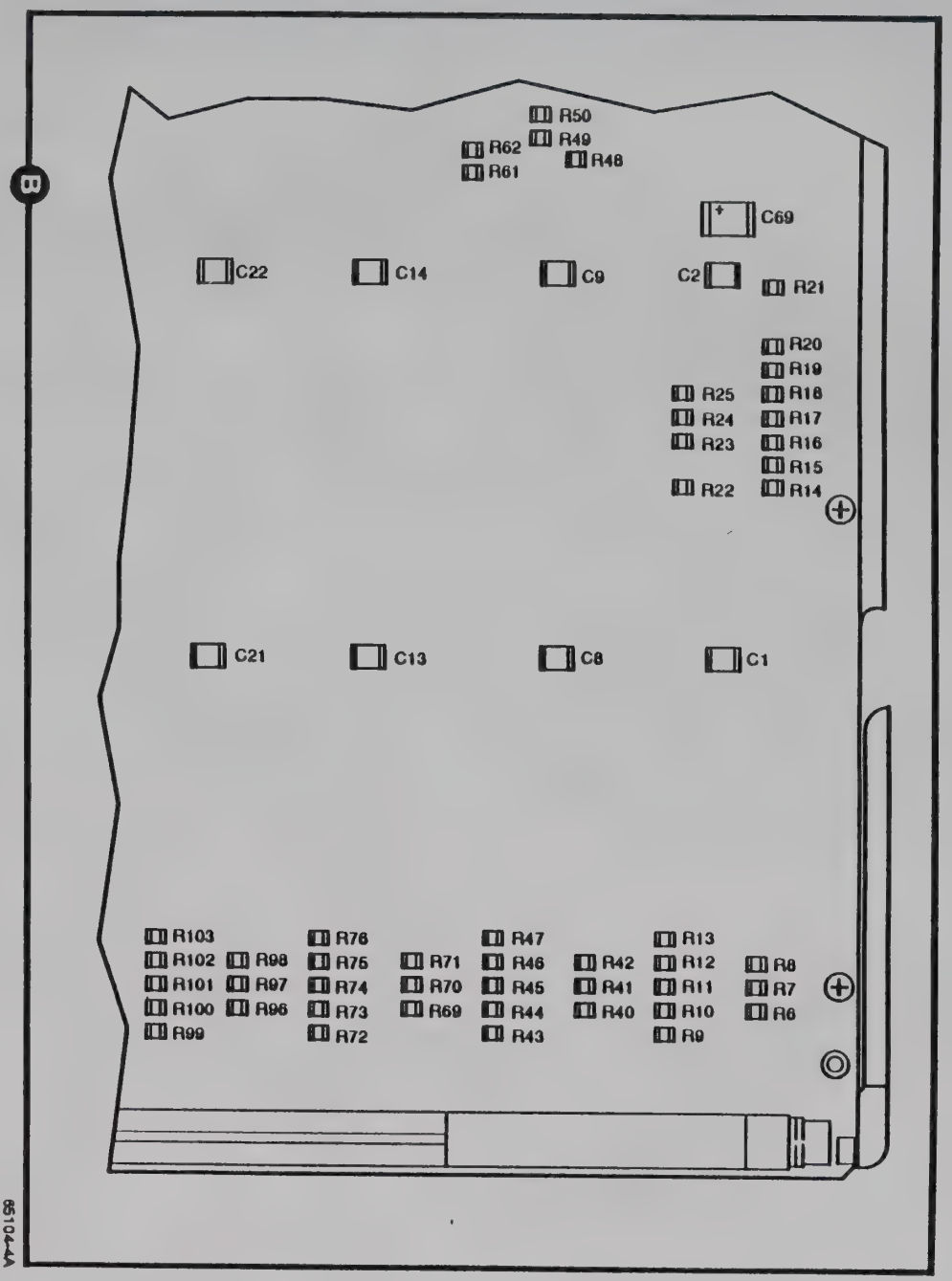
R50
R49
R62
R48
R61
C69
C22
C14
C9
C2
R21
R20
R19
R25
R18
R24
R17
R23
R16
R15
R22
R14
C21
C13
C8
C1
R103
R102
R101
R100
R99
R98
R97
R96
R76
R75
R74
R73
R72
R71
R70
R69
R47
R46
R45
R44
R43
R42
R41
R40
R13
R12
R11
R10
R9
R8
R7
R6
B
85104-4A

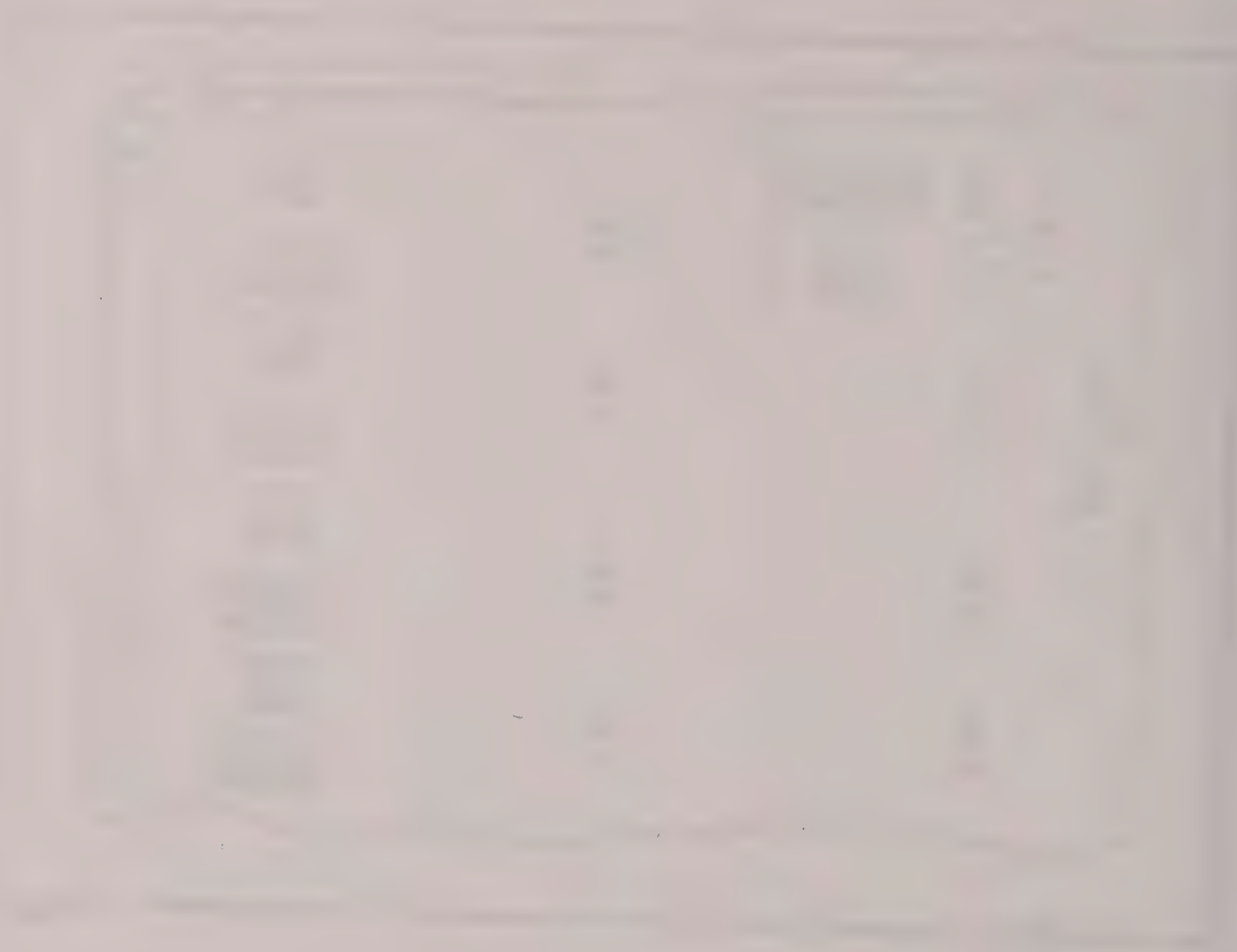

65104-5

Figure 5. CCA, CP (Sheet 5 of 9)

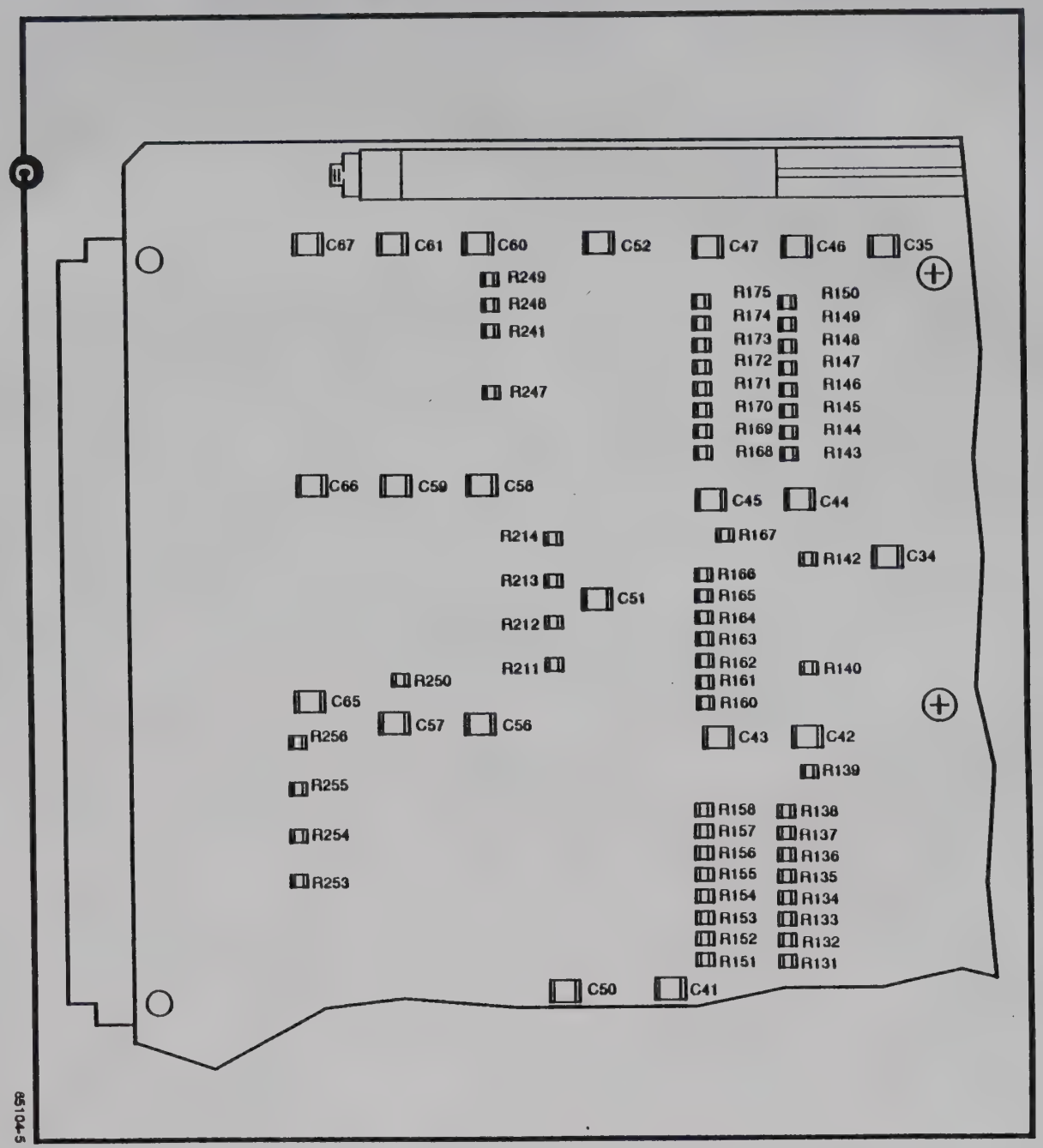
C67
C61
C60
C52
C47
C46
C35
R249
R248
R241
R247
R175
R174
R173
R172
R171
R170
R169
R168
R150
R149
R148
R147
R146
R145
R144
R143
C66
C59
C58
C45
C44
R214
R213
R212
R211
C51
R167
R142
C34
R166
R165
R164
R163
R162
R161
R160
R140
R250
C65
C57
C56
R256
R255
R254
R253
C43
C42
R139
R158
R157
R156
R155
R154
R153
R152
R151
R138
R137
R136
R135
R134
R133
R132
R131
C50
C41
C
851045

65104-6

Figure 5. CCA, CP (Sheet 6 of 9)

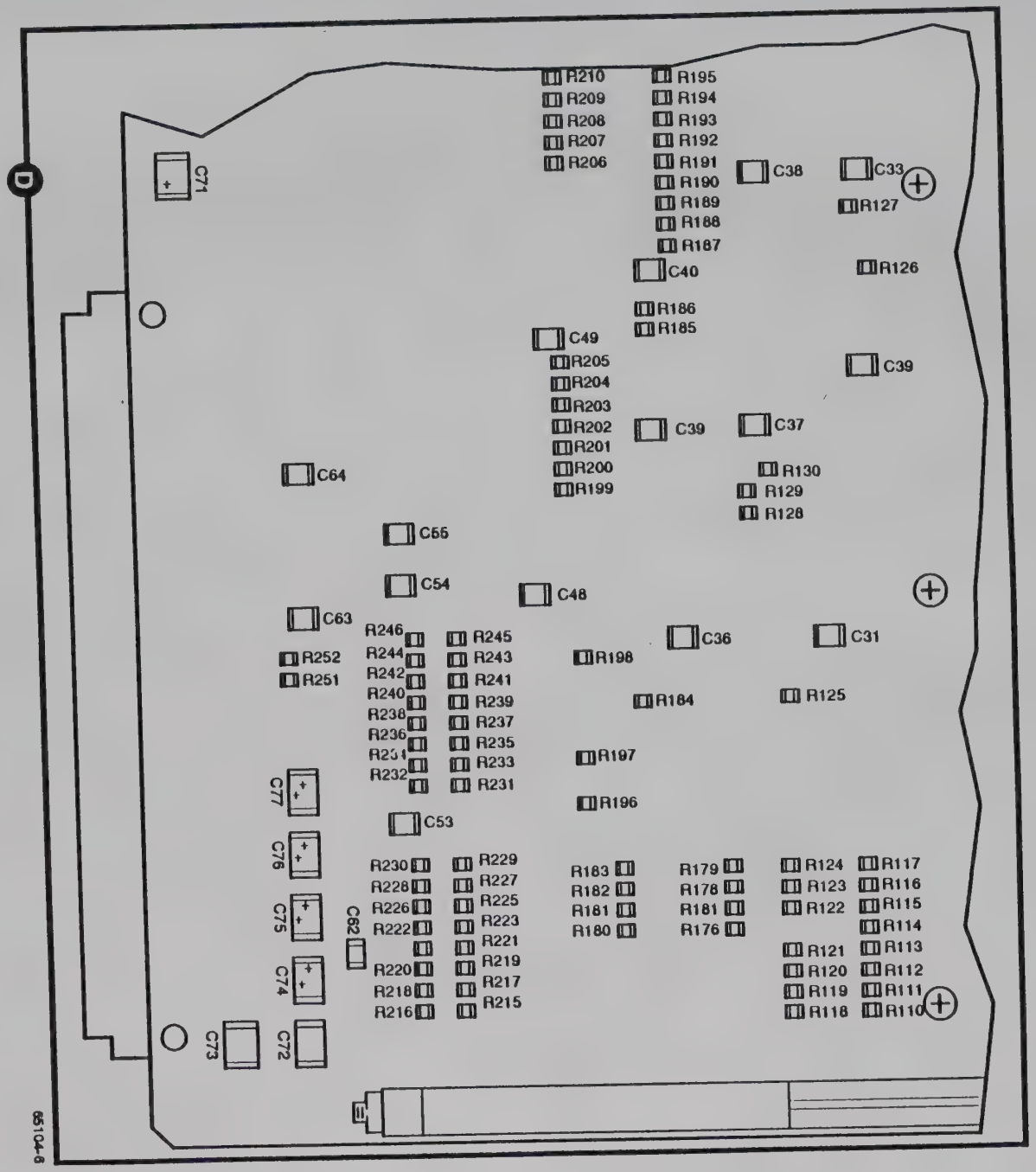
D
C71
R210
R209
R208
R207
R206
R195
R194
R193
R192
R191
R190
R189
R188
R187
C38
C33
R127
C40
R126
R186
R185
C49
R205
R204
R203
R202
R201
R200
R199
C39
C39
C37
C64
R130
R129
R128
C55
C54
C48
C63
R246
R244
R242
R240
R238
R236
R234
R232
R245
R243
R241
R239
R237
R235
R233
R231
R252
R251
C36
C31
R198
R184
R125
R197
R196
C77
C76
C75
C74
C53
C62
R230
R228
R226
R222
R220
R218
R216
R229
R227
R225
R223
R221
R219
R217
R215
R183
R182
R181
R180
R179
R178
R181
R176
R124
R123
R122
R121
R120
R119
R118
R117
R116
R115
R114
R113
R112
R111
R110
C73
C72
65104-8

65104-7

Figure 5. CCA, CP (Sheet 7 of 9)

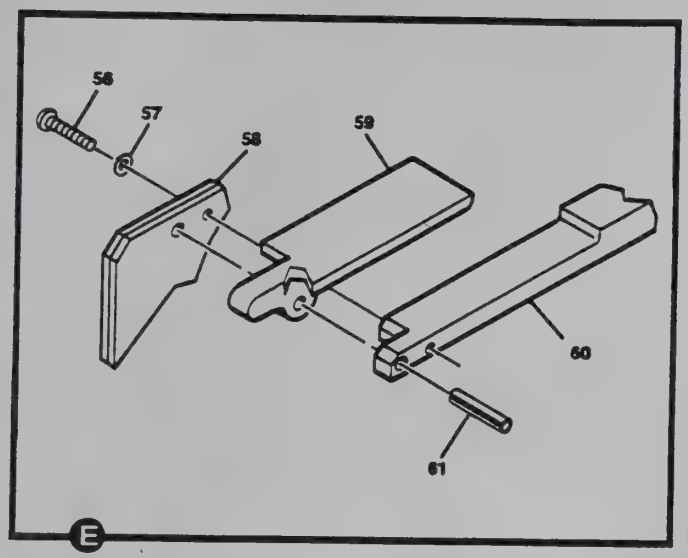
56
57
58
59
60
61
E

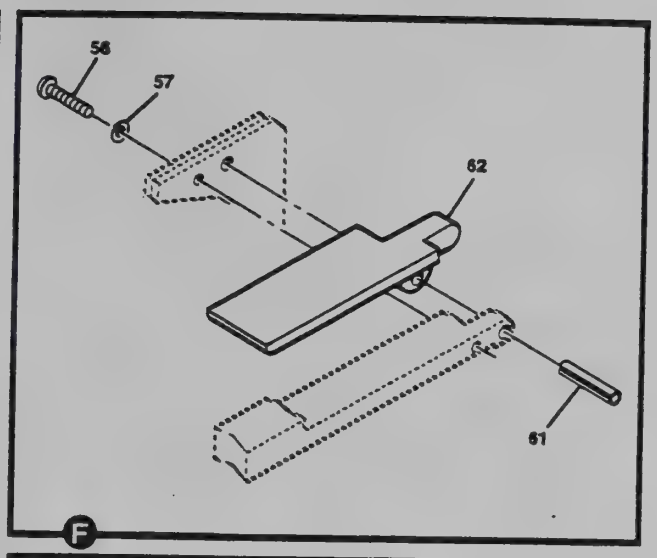
56
57
62
61
F

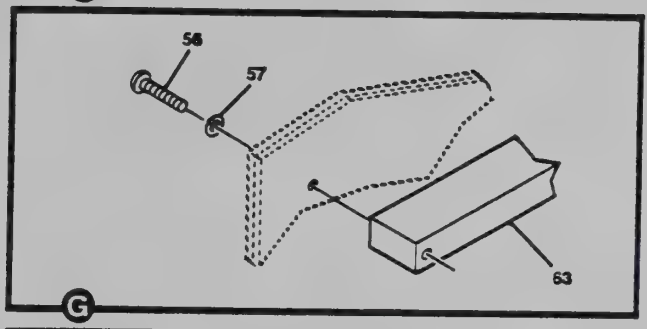
56
57
63
G

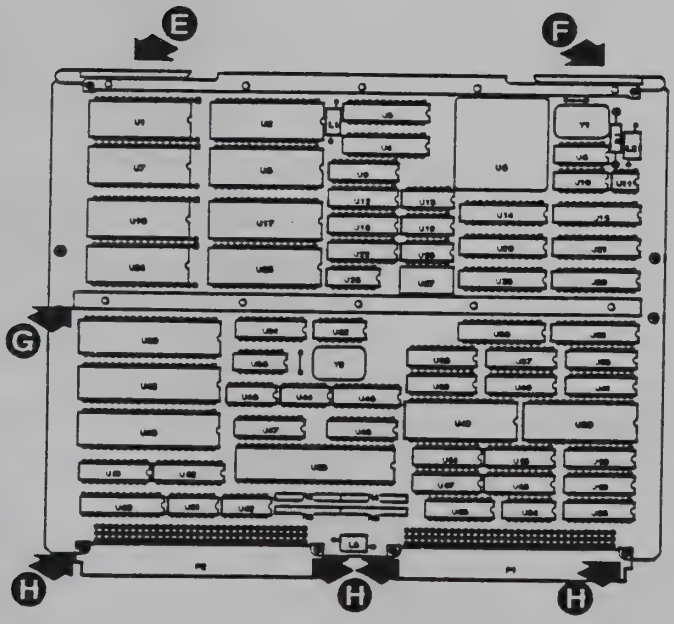
E
F
G
H
H
H

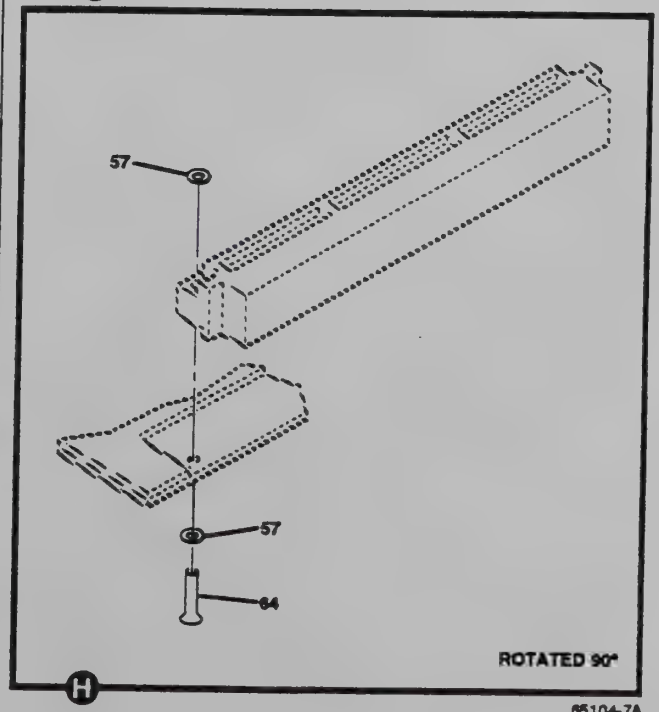
57
57
64
ROTATED 90°
H

65104-7A

65104-8

Figure 5. CCA, CP (Sheet 8 of 9)

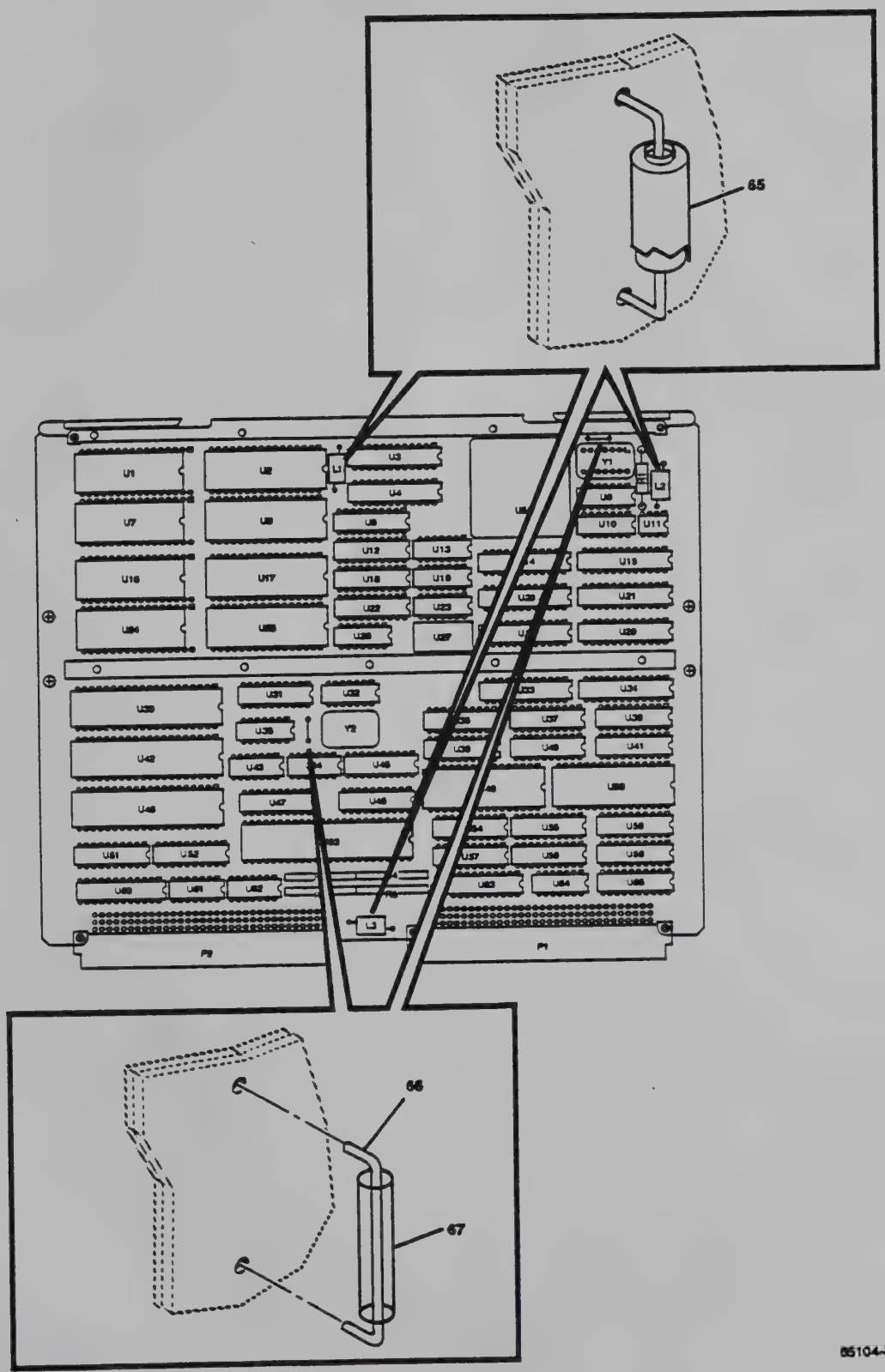

85104-8A

REF DES	ITEM NO.	REF DES	ITEM NO.	REF DES	ITEM NO.	REF DES	ITEM NO.
C1	1	THRU		U4	18	U36	25
THRU		R127		U5	19	U37	22
C67		R128	11	U6	20	U38	25
C69	2	R129	13	U7	15	THRU	
THRU		R130	14	U8	21	U41	
C71		R131	10	U9	22	U42	39
C72	3	THRU		U10	23	U43	23
THRU		R186		U11	24	U44	30
C77		R187	14	U12	25	U45	25
C78	1	THRU		U13	26	U46	43
C79	1	R194		U14	27	U47	44
L1	4	R195	10	U15	28	U48	44
THRU		THRU		U16	15	U49	45
L3		R198		U17	29	U50	45
P1	5	R199	14	U18	25	U51	46
P2	6	THRU		U19	30	U52	47
R1	7	R204		U20	31	U53	48
R2	8	R205	10	U21	32	U54	44
R3	9	R206	14	U22	25	U55	49
R4	8	THRU		U23	33	U56	22
R5	9	R209		U24	15	U57	44
R6	10	R210	10	U25	34	THRU	
THRU		THRU		U26	35	U59	
R36		R214		U27	36	U60	50
R37	11	R247	10	U28	37	U61	23
THRU		R248	14	U29	38	U62	23
R39		R249	10	U30	39	U63	51
R40	10	THRU		U31	25	U64	23
THRU		R257		U32	40	U65	44
R59		U1	15	U33	41	Y1	52
R60	12	U2	16	U34	42	Y2	53
R61	10	U3	17	U35	23		

Figure 5. CCA, CP (Sheet 9 of 9)

(1) Item No	(2) SMR Code	(3) FSCM	(4) Part Number	(5) Description and Usable on Code (UOC)	(6) Qty

Figure 5 data

65105

Figure 6. Chassis-Electrical Equipment

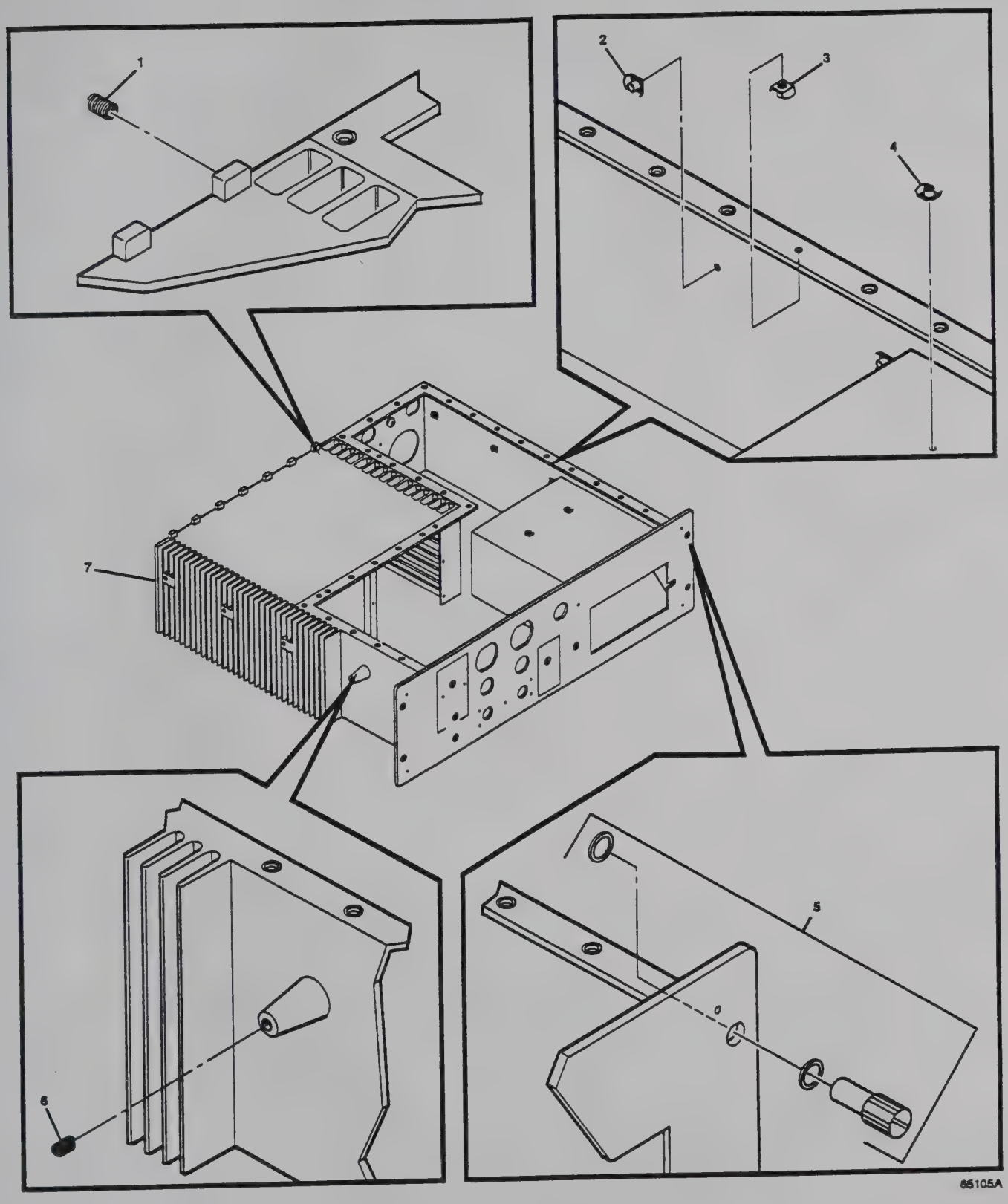
1
2
3
4
5
6
7
65105A

(1) Item No	(2) SMR Code	(3) FSCM	(4) Part Number	(5) Description and Usable on Code (UOC)	(6) Qty

Figure 6 data

65106-1

Figure 7. Wire Harness, Audio (Sheet 1 of 3)

65106-2

Figure 7. Wire Harness, Audio (Sheet 2 of 3)

65106-3

Figure 7. Wire Harness, Audio (Sheet 3 of 3)

(1) Item No	(2) SMR Code	(3) FSCM	(4) Part Number	(5) Description and Usable on Code (UOC)	(6) Qty

Figure 7 data

65107-1

Figure 8. Wire Harness, CP (Sheet 1 of 3)

65107-2

Figure 8. Wire Harness, CP (Sheet 2 of 3)

65107-3

Figure 8. Wire Harness, CP (Sheet 3 of 3)

(1) Item No	(2) SMR Code	(3) FSCM	(4) Part Number	(5) Description and Usable on Code (UOC)	(6) Qty

Figure 8 data

BULK ITEMS

Figure. BULK

(1) Item No	(2) SMR Code	(3) FSCM	(4) Part Number	(5) Description and Usable on Code (UOC)	(6) Qty

Figure BULK data

(1) Item No	(2) SMR Code	(3) FSCM	(4) Part Number	(5) Description and Usable on Code (UOC)	(6) Qty

SPECIAL TOOLS LIST
NOT APPLICABLE

CROSS-REFERENCE INDEXES

NATIONAL STOCK NUMBER INDEX

Stock Number	Fig.	Item	Stock Number	Fig.	Item

C-4 blank

CROSS-REFERENCE INDEXES

NATIONAL STOCK NUMBER INDEX

Stock Number	Fig.	Item	Stock Number	Fig.	Item

CROSS-REFERENCE INDEXES

PART NUMBER INDEX

FSCM	Part Number	Stock Number	Fig.	Item

CROSS-REFERENCE INDEXES

PART NUMBER INDEX

FSCM	Part Number	Stock Number	Fig.	Item

CROSS-REFERENCE INDEXES

FIGURE AND ITEM NUMBER INDEX

Fig.	Item	Stock Number	FSCM	Part Number

CROSS-REFERENCE INDEXES

FIGURE AND ITEM NUMBER INDEX

Fig.	Item	Stock Number	FSCM	Part Number

CROSS-REFERENCE INDEXES

REFERENCE DESIGNATOR (REF DES) INDEX

REF. DES.	FIG.	ITEM	REF. DES.	FIG.	ITEM	REF. DES.	FIG.	ITEM
1	REF	REF	1A1A1XA4J1	3	9	1A1A2C24	4	2
1A1	1	1	1A1A1XA4J2	3	10	1A1A2C25	4	2
1A1A1	2		1A1A1XPS1J1	3	11	1A1A2C26	4	2
1A1A1C1	3	1	1A1A1XPS1J2	3	12	1A1A2C27	4	2
1A1A1C2	3	1	1A1A2	2		1A1A2C28	4	4
1A1A1C3	3	1	1A1A2AR1	4	1	1A1A2C29	4	2
1A1A1C4	3	1	1A1A2AR2	4	1	1A1A2C30	4	4
1A1A1C5	3	1	1A1A2C1	4	2	1A1A2C31	4	4
1A1A1C6	3	1	1A1A2C2	4	3	1A1A2C32	4	4
1A1A1C7	3	1	1A1A2C3	4	4	1A1A2C33	4	4
1A1A1C8	3	1	1A1A2C4	4	4	1A1A2C34	4	4
1A1A1C9	3	1	1A1A2C5	4	4	1A1A2C35	4	4
1A1A1E1	3	2	1A1A2C6	4	5	1A1A2C36	4	4
1A1A1E2	3	2	1A1A2C7	4	5	1A1A2C37	4	4
1A1A1E3	3	2	1A1A2C8	4	5	1A1A2C38	4	3
1A1A1J1	3	3	1A1A2C9	4	5	1A1A2C39	4	4
1A1A1J2	3	4	1A1A2C10	4	4	1A1A2C40	4	6
1A1A1J3	3	5	1A1A2C11	4	4	1A1A2C41	4	6
1A1A1J4	3	6	1A1A2C12	4	4	1A1A2C42	4	6
1A1A1R1	3	7	1A1A2C13	4	5	1A1A2C43	4	6
1A1A1R2	3	8	1A1A2C14	4	5	1A1A2C44	4	6
1A1A1R3	3	7	1A1A2C15	4	4	1A1A2C45	4	6
1A1A1R4	3	8	1A1A2C16	4	4	1A1A2C46	4	4
1A1A1R5	3	8	1A1A2C17	4	4	1A1A2C47	4	4
1A1A1R6	3	8	1A1A2C18	4	4	1A1A2C48	4	4
1A1A1R7	3	7	1A1A2C19	4	4	1A1A2C49	4	4
1A1A1R8	3	7	1A1A2C20	4	4	1A1A2C50	4	4
1A1A1R9	3	7	1A1A2C21	4	4	1A1A2C51	4	4
1A1A1XA2J1	3	9	1A1A2C22	4	4	1A1A2C52	4	4
1A1A1XA2J2	3	9	1A1A2C23	4	4	1A1A2C53	4	4

CROSS-REFERENCE INDEXES

REFERENCE DESIGNATOR (REF DES) INDEX

REF. DES.	FIG.	ITEM	REF. DES.	FIG.	ITEM	REF. DES.	FIG.	ITEM
1A1A2C54	4	4	1A1A2C84	4	4	1A1A2C114	4	4
1A1A2C55	4	4	1A1A2C85	4	5	1A1A2C115	4	4
1A1A2C56	4	4	1A1A2C86	4	5	1A1A2C116	4	4
1A1A2C57	4	2	1A1A2C87	4	4	1A1A2C117	4	3
1A1A2C58	4	4	1A1A2C88	4	4	1A1A2C118	4	3
1A1A2C59	4	2	1A1A2C89	4	5	1A1A2C119	4	4
1A1A2C60	4	2	1A1A2C90	4	4	1A1A2C120	4	4
1A1A2C61	4	4	1A1A2C91	4	4	1A1A2C121	4	5
1A1A2C62	4	2	1A1A2C92	4	4	1A1A2C122	4	6
1A1A2C63	4	4	1A1A2C93	4	4	1A1A2C123	4	5
1A1A2C64	4	4	1A1A2C94	4	4	1A1A2C124	4	7
1A1A2C65	4	4	1A1A2C95	4	6	1A1A2C125	4	5
1A1A2C66	4	4	1A1A2C96	4	4	1A1A2C126	4	6
1A1A2C67	4	4	1A1A2C97	4	4	1A1A2C127	4	5
1A1A2C68	4	4	1A1A2C98	4	6	1A1A2C128	4	7
1A1A2C69	4	4	1A1A2C99	4	4	1A1A2C129	4	4
1A1A2C70	4	4	1A1A2C100	4	4	1A1A2C130	4	4
1A1A2C71	4	4	1A1A2C101	4	4	1A1A2C131	4	4
1A1A2C72	4	4	1A1A2C102	4	4	1A1A2C132	4	4
1A1A2C73	4	4	1A1A2C103	4	4	1A1A2C133	4	4
1A1A2C74	4	4	1A1A2C104	4	4	1A1A2C134	4	4
1A1A2C75	4	4	1A1A2C105	4	4	1A1A2C135	4	4
1A1A2C76	4	4	1A1A2C106	4	6	1A1A2C136	4	4
1A1A2C77	4	4	1A1A2C107	4	4	1A1A2C137	4	4
1A1A2C78	4	5	1A1A2C108	4	6	1A1A2C138	4	4
1A1A2C79	4	5	1A1A2C109	4	4	1A1A2C139	4	4
1A1A2C80	4	4	1A1A2C110	4	6	1A1A2C140	4	4
1A1A2C81	4	4	1A1A2C111	4	4	1A1A2C141	4	4
1A1A2C82	4	4	1A1A2C112	4	6	1A1A2C142	4	4
1A1A2C83	4	5	1A1A2C113	4	4	1A1A2C143	4	4

CROSS-REFERENCE INDEXES

REFERENCE DESIGNATOR (REF DES) INDEX

REF. DES.	FIG.	ITEM	REF. DES.	FIG.	ITEM	REF. DES.	FIG.	ITEM
1A1A2C144	4	4	1A1A2C174	4	5	1A1A2C207	4	4
1A1A2C145	4	4	1A1A2C175	4	4	1A1A2C208	4	4
1A1A2C146	4	4	1A1A2C176	4	8	1A1A2C209	4	4
1A1A2C147	4	4	1A1A2C180	4	4	1A1A2C210	4	3
1A1A2C148	4	4	1A1A2C181	4	4	1A1A2C211	4	4
1A1A2C149	4	4	1A1A2C182	4	4	1A1A2C212	4	4
1A1A2C150	4	4	1A1A2C183	4	4	1A1A2C213	4	4
1A1A2C151	4	4	1A1A2C184	4	4	1A1A2C214	4	4
1A1A2C152	4	4	1A1A2C185	4	4	1A1A2C215	4	4
1A1A2C153	4	4	1A1A2C186	4	4	1A1A2C216	4	4
1A1A2C154	4	4	1A1A2C187	4	4	1A1A2C217	4	2
1A1A2C155	4	4	1A1A2C188	4	4	1A1A2C218	4	2
1A1A2C156	4	4	1A1A2C189	4	4	1A1A2C219	4	2
1A1A2C157	4	4	1A1A2C190	4	4	1A1A2C220	4	2
1A1A2C158	4	4	1A1A2C191	4	8	1A1A2C221	4	4
1A1A2C159	4	4	1A1A2C192	4	4	1A1A2C222	4	4
1A1A2C160	4	4	1A1A2C193	4	4	1A1A2C223	4	4
1A1A2C161	4	4	1A1A2C194	4	5	1A1A2L1	4	11
1A1A2C162	4	4	1A1A2C195	4	4	1A1A2L2	4	11
1A1A2C163	4	4	1A1A2C196	4	9	1A1A2L3	4	11
1A1A2C164	4	4	1A1A2C197	4	4	1A1A2L4	4	11
1A1A2C165	4	4	1A1A2C198	4	4	1A1A2L5	4	11
1A1A2C166	4	4	1A1A2C199	4	4	1A1A2L6	4	11
1A1A2C167	4	4	1A1A2C200	4	4	1A1A2L7	4	11
1A1A2C168	4	4	1A1A2C201	4	3	1A1A2L8	4	11
1A1A2C169	4	4	1A1A2C202	4	3	1A1A2P1	4	12
1A1A2C170	4	4	1A1A2C203	4	10	1A1A2P2	4	12
1A1A2C171	4	4	1A1A2C204	4	10	1A1A2R1	4	13
1A1A2C172	4	4	1A1A2C205	4	3	1A1A2R5	4	14
1A1A2C173	4	4	1A1A2C206	4	4	1A1A2R6	4	14

CROSS-REFERENCE INDEXES

REFERENCE DESIGNATOR (REF DES) INDEX

REF. DES.	FIG.	ITEM	REF. DES.	FIG.	ITEM	REF. DES.	FIG.	ITEM
1A1A2R7	4	14	1A1A2R37	4	14	1A1A2R67	4	15
1A1A2R8	4	14	1A1A2R38	4	14	1A1A2R68	4	15
1A1A2R9	4	14	1A1A2R39	4	14	1A1A2R69	4	16
1A1A2R10	4	14	1A1A2R40	4	14	1A1A2R70	4	14
1A1A2R11	4	14	1A1A2R41	4	14	1A1A2R71	4	14
1A1A2R12	4	14	1A1A2R42	4	14	1A1A2R72	4	14
1A1A2R13	4	14	1A1A2R43	4	14	1A1A2R73	4	14
1A1A2R14	4	14	1A1A2R44	4	14	1A1A2R74	4	14
1A1A2R15	4	14	1A1A2R45	4	14	1A1A2R75	4	14
1A1A2R16	4	14	1A1A2R46	4	14	1A1A2R76	4	14
1A1A2R17	4	14	1A1A2R47	4	14	1A1A2R77	4	14
1A1A2R18	4	14	1A1A2R48	4	14	1A1A2R78	4	14
1A1A2R19	4	14	1A1A2R49	4	14	1A1A2R79	4	14
1A1A2R20	4	14	1A1A2R50	4	14	1A1A2R80	4	14
1A1A2R21	4	14	1A1A2R51	4	14	1A1A2R81	4	14
1A1A2R22	4	14	1A1A2R52	4	14	1A1A2R82	4	14
1A1A2R23	4	14	1A1A2R53	4	14	1A1A2R83	4	16
1A1A2R24	4	14	1A1A2R54	4	14	1A1A2R84	4	15
1A1A2R25	4	14	1A1A2R55	4	15	1A1A2R85	4	16
1A1A2R26	4	13	1A1A2R56	4	15	1A1A2R86	4	16
1A1A2R27	4	13	1A1A2R57	4	15	1A1A2R87	4	16
1A1A2R28	4	13	1A1A2R58	4	15	1A1A2R88	4	15
1A1A2R29	4	13	1A1A2R59	4	16	1A1A2R89	4	16
1A1A2R30	4	13	1A1A2R60	4	15	1A1A2R90	4	16
1A1A2R31	4	14	1A1A2R61	4	15	1A1A2R91	4	16
1A1A2R32	4	14	1A1A2R62	4	15	1A1A2R92	4	16
1A1A2R33	4	14	1A1A2R63	4	15	1A1A2R93	4	15
1A1A2R34	4	14	1A1A2R64	4	16	1A1A2R94	4	16
1A1A2R35	4	14	1A1A2R65	4	15	1A1A2R95	4	16
1A1A2R36	4	14	1A1A2R66	4	15	1A1A2R96	4	16

CROSS-REFERENCE INDEXES

REFERENCE DESIGNATOR (REF DES) INDEX

REF. DES.	FIG.	ITEM	REF. DES.	FIG.	ITEM	REF. DES.	FIG.	ITEM
1A1A2R97	4	14	1A1A2R127	4	14	1A1A2R160	4	15
1A1A2R98	4	14	1A1A2R128	4	14	1A1A2R161	4	17
1A1A2R99	4	14	1A1A2R129	4	16	1A1A2R162	4	16
1A1A2R100	4	14	1A1A2R130	4	14	1A1A2R163	4	16
1A1A2R101	4	14	1A1A2R131	4	14	1A1A2R164	4	16
1A1A2R102	4	14	1A1A2R132	4	14	1A1A2R165	4	15
1A1A2R103	4	14	1A1A2R133	4	14	1A1A2R166	4	17
1A1A2R104	4	14	1A1A2R134	4	15	1A1A2R167	4	16
1A1A2R105	4	14	1A1A2R135	4	15	1A1A2R168	4	16
1A1A2R106	4	14	1A1A2R136	4	15	1A1A2R169	4	18
1A1A2R107	4	13	1A1A2R137	4	15	1A1A2R170	4	16
1A1A2R108	4	13	1A1A2R138	4	16	1A1A2R171	4	15
1A1A2R109	4	13	1A1A2R140	4	16	1A1A2R172	4	18
1A1A2R110	4	13	1A1A2R141	4	15	1A1A2R173	4	16
1A1A2R111	4	16	1A1A2R142	4	15	1A1A2R174	4	15
1A1A2R112	4	17	1A1A2R143	4	15	1A1A2R175	4	14
1A1A2R113	4	17	1A1A2R144	4	15	1A1A2R176	4	14
1A1A2R114	4	17	1A1A2R145	4	16	1A1A2R177	4	14
1A1A2R115	4	14	1A1A2R147	4	16	1A1A2R178	4	14
1A1A2R116	4	14	1A1A2R148	4	15	1A1A2R179	4	14
1A1A2R117	4	14	1A1A2R149	4	15	1A1A2R180	4	14
1A1A2R118	4	14	1A1A2R150	4	15	1A1A2R181	4	15
1A1A2R119	4	14	1A1A2R151	4	15	1A1A2R182	4	15
1A1A2R120	4	14	1A1A2R152	4	16	1A1A2R183	4	15
1A1A2R121	4	14	1A1A2R154	4	16	1A1A2R184	4	15
1A1A2R122	4	14	1A1A2R155	4	15	1A1A2R185	4	15
1A1A2R123	4	14	1A1A2R156	4	17	1A1A2R186	4	15
1A1A2R124	4	14	1A1A2R157	4	16	1A1A2R187	4	19
1A1A2R125	4	14	1A1A2R158	4	16	1A1A2R188	4	20
1A1A2R126	4	14	1A1A2R159	4	16	1A1A2R189	4	15

CROSS-REFERENCE INDEXES

REFERENCE DESIGNATOR (REF DES) INDEX

REF. DES.	FIG.	ITEM	REF. DES.	FIG.	ITEM	REF. DES.	FIG.	ITEM
1A1A2R190	4	15	1A1A2R222	4	21	1A1A2R254	4	14
1A1A2R191	4	15	1A1A2R223	4	21	1A1A2R255	4	14
1A1A2R192	4	16	1A1A2R224	4	21	1A1A2R256	4	14
1A1A2R193	4	19	1A1A2R225	4	21	1A1A2R257	4	14
1A1A2R194	4	20	1A1A2R226	4	21	1A1A2R258	4	14
1A1A2R195	4	15	1A1A2R227	4	21	1A1A2R259	4	14
1A1A2R196	4	15	1A1A2R228	4	22	1A1A2R260	4	14
1A1A2R197	4	15	1A1A2R229	4	16	1A1A2R261	4	14
1A1A2R198	4	16	1A1A2R230	4	21	1A1A2R262	4	14
1A1A2R199	4	14	1A1A2R232	4	15	1A1A2R263	4	25
1A1A2R200	4	14	1A1A2R233	4	15	1A1A2R264	4	25
1A1A2R201	4	14	1A1A2R234	4	23	1A1A2R265	4	25
1A1A2R202	4	14	1A1A2R235	4	24	1A1A2R266	4	25
1A1A2R203	4	14	1A1A2R236	4	24	1A1A2R267	4	25
1A1A2R204	4	14	1A1A2R237	4	14	1A1A2R268	4	25
1A1A2R205	4	21	1A1A2R238	4	14	1A1A2R269	4	25
1A1A2R206	4	21	1A1A2R239	4	14	1A1A2R270	4	14
1A1A2R207	4	21	1A1A2R240	4	21	1A1A2R272	4	13
1A1A2R208	4	21	1A1A2R241	4	21	1A1A2R273	4	13
1A1A2R209	4	21	1A1A2R242	4	23	1A1A2R274	4	13
1A1A2R210	4	21	1A1A2R243	4	15	1A1A2R275	4	13
1A1A2R211	4	17	1A1A2R245	4	15	1A1A2R276	4	24
1A1A2R212	4	16	1A1A2R246	4	21	1A1A2R277	4	16
1A1A2R213	4	21	1A1A2R247	4	16	1A1A2R278	4	16
1A1A2R214	4	16	1A1A2R248	4	22	1A1A2R279	4	14
1A1A2R216	4	17	1A1A2R249	4	21	1A1A2R280	4	14
1A1A2R217	4	16	1A1A2R250	4	14	1A1A2R281	4	14
1A1A2R218	4	21	1A1A2R251	4	14	1A1A2R282	4	14
1A1A2R219	4	16	1A1A2R252	4	14	1A1A2R283	4	14
1A1A2R221	4	21	1A1A2R253	4	14	1A1A2R284	4	14

CROSS-REFERENCE INDEXES

REFERENCE DESIGNATOR (REF DES) INDEX

REF. DES.	FIG.	ITEM	REF. DES.	FIG.	ITEM	REF. DES.	FIG.	ITEM
1A1A2R285	4	14	1A1A2R315	4	14	1A1A2U12	4	39
1A1A2R286	4	14	1A1A2R316	4	14	1A1A2U13	4	36
1A1A2R287	4	14	1A1A2R317	4	14	1A1A2U14	4	40
1A1A2R288	4	14	1A1A2R318	4	14	1A1A2U15	4	41
1A1A2R289	4	14	1A1A2R319	4	26	1A1A2U16	4	42
1A1A2R290	4	14	1A1A2R320	4	15	1A1A2U17	4	43
1A1A2R291	4	14	1A1A2R322	4	26	1A1A2U18	4	44
1A1A2R292	4	14	1A1A2R323	4	15	1A1A2U19	4	44
1A1A2R293	4	14	1A1A2T1	4	27	1A1A2U20	4	44
1A1A2R294	4	14	1A1A2T2	4	27	1A1A2U21	4	45
1A1A2R295	4	14	1A1A2T3	4	27	1A1A2U22	4	45
1A1A2R296	4	14	1A1A2T4	4	27	1A1A2U23	4	45
1A1A2R297	4	14	1A1A2T5	4	27	1A1A2U24	4	45
1A1A2R298	4	14	1A1A2T6	4	27	1A1A2U25	4	46
1A1A2R299	4	14	1A1A2T7	4	28	1A1A2U26	4	46
1A1A2R300	4	14	1A1A2T8	4	28	1A1A2U27	4	46
1A1A2R301	4	14	1A1A2T9	4	29	1A1A2U28	4	47
1A1A2R302	4	14	1A1A2T10	4	29	1A1A2U29	4	48
1A1A2R303	4	14	1A1A2T13	4	29	1A1A2U30	4	49
1A1A2R304	4	14	1A1A2U1	4	30	1A1A2U31	4	50
1A1A2R305	4	14	1A1A2U2	4	31	1A1A2U32	4	51
1A1A2R306	4	14	1A1A2U3	4	32	1A1A2U33	4	44
1A1A2R307	4	14	1A1A2U4	4	33	1A1A2U34	4	44
1A1A2R308	4	14	1A1A2U5	4	34	1A1A2U35	4	44
1A1A2R309	4	14	1A1A2U6	4	35	1A1A2U36	4	52
1A1A2R310	4	14	1A1A2U7	4	36	1A1A2U37	4	52
1A1A2R311	4	14	1A1A2U8	4	37	1A1A2U38	4	53
1A1A2R312	4	14	1A1A2U9	4	38	1A1A2U39	4	54
1A1A2R313	4	14	1A1A2U10	4	39	1A1A2U40	4	54
1A1A2R314	4	14	1A1A2U11	4	37	1A1A2U41	4	55

CROSS-REFERENCE INDEXES

REFERENCE DESIGNATOR (REF DES) INDEX

REF. DES.	FIG.	ITEM	REF. DES.	FIG.	ITEM	REF. DES.	FIG.	ITEM
1A1A2U42	4	56	1A1A2U72	4	46	1A1A4C2	5	1
1A1A2U43	4	57	1A1A2U73	4	66	1A1A4C3	5	1
1A1A2U44	4	57	1A1A2U74	4	64	1A1A4C4	5	1
1A1A2U45	4	58	1A1A2U75	4	64	1A1A4C5	5	1
1A1A2U46	4	57	1A1A2U76	4	64	1A1A4C6	5	1
1A1A2U47	4	57	1A1A2U77	4	64	1A1A4C7	5	1
1A1A2U48	4	46	1A1A2U78	4	63	1A1A4C8	5	1
1A1A2U49	4	46	1A1A2U79	4	46	1A1A4C9	5	1
1A1A2U50	4	46	1A1A2U81	4	67	1A1A4C10	5	1
1A1A2U51	4	59	1A1A2U82	4	68	1A1A4C11	5	1
1A1A2U52	4	60	1A1A2U83	4	69	1A1A4C12	5	1
1A1A2U53	4	61	1A1A2U84	4	70	1A1A4C13	5	1
1A1A2U54	4	60	1A1A2U85	4	71	1A1A4C14	5	1
1A1A2U55	4	62	1A1A2U86	4	63	1A1A4C15	5	1
1A1A2U56	4	44	1A1A2U87	4	69	1A1A4C16	5	1
1A1A2U57	4	44	1A1A2U88	4	72	1A1A4C17	5	1
1A1A2U58	4	57	1A1A2U89	4	64	1A1A4C18	5	1
1A1A2U59	4	57	1A1A2U90	4	72	1A1A4C19	5	1
1A1A2U60	4	57	1A1A2U91	4	72	1A1A4C20	5	1
1A1A2U61	4	57	1A1A2U92	4	73	1A1A4C21	5	1
1A1A2U62	4	63	1A1A2U93	4	68	1A1A4C22	5	1
1A1A2U63	4	63	1A1A2U94	4	69	1A1A4C23	5	1
1A1A2U64	4	46	1A1A2VR1	4	74	1A1A4C24	5	1
1A1A2U65	4	46	1A1A2VR2	4	74	1A1A4C25	5	1
1A1A2U66	4	64	1A1A2VR3	4	74	1A1A4C26	5	1
1A1A2U67	4	65	1A1A2VR4	4	74	1A1A4C27	5	1
1A1A2U68	4	64	1A1A2Y1	4	75	1A1A4C28	5	1
1A1A2U69	4	64	1A1A2Y2	4	76	1A1A4C29	5	1
1A1A2U70	4	63	1A1A4	2		1A1A4C30	5	1
1A1A2U71	4	63	1A1A4C1	5	1	1A1A4C31	5	1

CROSS-REFERENCE INDEXES

REFERENCE DESIGNATOR (REF DES) INDEX

REF. DES.	FIG.	ITEM	REF. DES.	FIG.	ITEM	REF. DES.	FIG.	ITEM
1A1A4C32	5	1	1A1A4C62	5	1	1A1A4R9	5	10
1A1A4C33	5	1	1A1A4C63	5	1	1A1A4R10	5	10
1A1A4C34	5	1	1A1A4C64	5	1	1A1A4R11	5	10
1A1A4C35	5	1	1A1A4C65	5	1	1A1A4R12	5	10
1A1A4C36	5	1	1A1A4C66	5	1	1A1A4R13	5	10
1A1A4C37	5	1	1A1A4C67	5	1	1A1A4R14	5	10
1A1A4C38	5	1	1A1A4C69	5	2	1A1A4R15	5	10
1A1A4C39	5	1	1A1A4C70	5	2	1A1A4R16	5	10
1A1A4C40	5	1	1A1A4C71	5	2	1A1A4R17	5	10
1A1A4C41	5	1	1A1A4C72	5	3	1A1A4R18	5	10
1A1A4C42	5	1	1A1A4C73	5	3	1A1A4R19	5	10
1A1A4C43	5	1	1A1A4C74	5	3	1A1A4R20	5	10
1A1A4C44	5	1	1A1A4C75	5	3	1A1A4R21	5	10
1A1A4C45	5	1	1A1A4C76	5	3	1A1A4R22	5	10
1A1A4C46	5	1	1A1A4C77	5	3	1A1A4R23	5	10
1A1A4C47	5	1	1A1A4C78	5	1	1A1A4R24	5	10
1A1A4C48	5	1	1A1A4C79	5	1	1A1A4R25	5	10
1A1A4C49	5	1	1A1A4L1	5	4	1A1A4R26	5	10
1A1A4C50	5	1	1A1A4L2	5	4	1A1A4R27	5	10
1A1A4C51	5	1	1A1A4L3	5	4	1A1A4R28	5	10
1A1A4C52	5	1	1A1A4P1	5	5	1A1A4R29	5	10
1A1A4C53	5	1	1A1A4P2	5	6	1A1A4R30	5	10
1A1A4C54	5	1	1A1A4R1	5	7	1A1A4R31	5	10
1A1A4C55	5	1	1A1A4R2	5	8	1A1A4R32	5	10
1A1A4C56	5	1	1A1A4R3	5	9	1A1A4R33	5	10
1A1A4C57	5	1	1A1A4R4	5	8	1A1A4R34	5	10
1A1A4C58	5	1	1A1A4R5	5	9	1A1A4R35	5	10
1A1A4C59	5	1	1A1A4R6	5	10	1A1A4R36	5	10
1A1A4C60	5	1	1A1A4R7	5	10	1A1A4R37	5	11
1A1A4C61	5	1	1A1A4R8	5	10	1A1A4R38	5	11

CROSS-REFERENCE INDEXES

REFERENCE DESIGNATOR (REF DES) INDEX

REF. DES.	FIG.	ITEM	REF. DES.	FIG.	ITEM	REF. DES.	FIG.	ITEM
1A1A4R39	5	11	1A1A4R69	5	10	1A1A4R99	5	10
1A1A4R40	5	10	1A1A4R70	5	10	1A1A4R100	5	10
1A1A4R41	5	10	1A1A4R71	5	10	1A1A4R101	5	10
1A1A4R42	5	10	1A1A4R72	5	10	1A1A4R102	5	10
1A1A4R43	5	10	1A1A4R73	5	10	1A1A4R103	5	10
1A1A4R44	5	10	1A1A4R74	5	10	1A1A4R104	5	10
1A1A4R45	5	10	1A1A4R75	5	10	1A1A4R105	5	10
1A1A4R46	5	10	1A1A4R76	5	10	1A1A4R106	5	10
1A1A4R47	5	10	1A1A4R77	5	10	1A1A4R107	5	10
1A1A4R48	5	10	1A1A4R78	5	10	1A1A4R108	5	10
1A1A4R49	5	10	1A1A4R79	5	10	1A1A4R109	5	10
1A1A4R50	5	10	1A1A4R80	5	10	1A1A4R110	5	10
1A1A4R51	5	10	1A1A4R81	5	10	1A1A4R111	5	10
1A1A4R52	5	10	1A1A4R82	5	10	1A1A4R112	5	10
1A1A4R53	5	10	1A1A4R83	5	10	1A1A4R113	5	10
1A1A4R54	5	10	1A1A4R84	5	10	1A1A4R114	5	10
1A1A4R55	5	10	1A1A4R85	5	10	1A1A4R115	5	10
1A1A4R56	5	10	1A1A4R86	5	10	1A1A4R116	5	10
1A1A4R57	5	10	1A1A4R87	5	10	1A1A4R117	5	10
1A1A4R58	5	10	1A1A4R88	5	10	1A1A4R118	5	10
1A1A4R59	5	10	1A1A4R89	5	10	1A1A4R119	5	10
1A1A4R60	5	12	1A1A4R90	5	10	1A1A4R120	5	10
1A1A4R61	5	10	1A1A4R91	5	10	1A1A4R121	5	10
1A1A4R62	5	10	1A1A4R92	5	10	1A1A4R122	5	10
1A1A4R63	5	10	1A1A4R93	5	10	1A1A4R123	5	10
1A1A4R64	5	10	1A1A4R94	5	10	1A1A4R124	5	10
1A1A4R65	5	10	1A1A4R95	5	10	1A1A4R125	5	10
1A1A4R66	5	10	1A1A4R96	5	10	1A1A4R126	5	10
1A1A4R67	5	10	1A1A4R97	5	10	1A1A4R127	5	10
1A1A4R68	5	10	1A1A4R98	5	10	1A1A4R128	5	11

CROSS-REFERENCE INDEXES

REFERENCE DESIGNATOR (REF DES) INDEX

REF. DES.	FIG.	ITEM	REF. DES.	FIG.	ITEM	REF. DES.	FIG.	ITEM
1A1A4R129	5	13	1A1A4R159	5	10	1A1A4R189	5	14
1A1A4R130	5	14	1A1A4R160	5	10	1A1A4R190	5	14
1A1A4R131	5	10	1A1A4R161	5	10	1A1A4R191	5	14
1A1A4R132	5	10	1A1A4R162	5	10	1A1A4R192	5	14
1A1A4R133	5	10	1A1A4R163	5	10	1A1A4R193	5	14
1A1A4R134	5	10	1A1A4R164	5	10	1A1A4R194	5	14
1A1A4R135	5	10	1A1A4R165	5	10	1A1A4R195	5	10
1A1A4R136	5	10	1A1A4R166	5	10	1A1A4R196	5	10
1A1A4R137	5	10	1A1A4R167	5	10	1A1A4R197	5	10
1A1A4R138	5	10	1A1A4R168	5	10	1A1A4R198	5	10
1A1A4R139	5	10	1A1A4R169	5	10	1A1A4R199	5	14
1A1A4R140	5	10	1A1A4R170	5	10	1A1A4R200	5	14
1A1A4R141	5	10	1A1A4R171	5	10	1A1A4R201	5	14
1A1A4R142	5	10	1A1A4R172	5	10	1A1A4R202	5	14
1A1A4R143	5	10	1A1A4R173	5	10	1A1A4R203	5	14
1A1A4R144	5	10	1A1A4R174	5	10	1A1A4R204	5	14
1A1A4R145	5	10	1A1A4R175	5	10	1A1A4R205	5	10
1A1A4R146	5	10	1A1A4R176	5	10	1A1A4R206	5	14
1A1A4R147	5	10	1A1A4R177	5	10	1A1A4R207	5	14
1A1A4R148	5	10	1A1A4R178	5	10	1A1A4R208	5	14
1A1A4R149	5	10	1A1A4R179	5	10	1A1A4R209	5	14
1A1A4R150	5	10	1A1A4R180	5	10	1A1A4R210	5	10
1A1A4R151	5	10	1A1A4R181	5	10	1A1A4R211	5	10
1A1A4R152	5	10	1A1A4R182	5	10	1A1A4R121	5	10
1A1A4R153	5	10	1A1A4R183	5	10	1A1A4R213	5	10
1A1A4R154	5	10	1A1A4R184	5	10	1A1A4R214	5	10
1A1A4R155	5	10	1A1A4R185	5	10	1A1A4R247	5	10
1A1A4R156	5	10	1A1A4R186	5	10	1A1A4R248	5	14
1A1A4R157	5	10	1A1A4R187	5	14	1A1A4R249	5	10
1A1A4R158	5	10	1A1A4R188	5	14	1A1A4R250	5	10

CROSS-REFERENCE INDEXES

REFERENCE DESIGNATOR (REF DES) INDEX

REF. DES.	FIG.	ITEM	REF. DES.	FIG.	ITEM	REF. DES.	FIG.	ITEM
1A1A4R251	5	10	1A1A4U24	5	15	1A1A4U54	5	44
1A1A4R252	5	10	1A1A4U25	5	34	1A1A4U55	5	49
1A1A4R253	5	10	1A1A4U26	5	35	1A1A4U56	5	22
1A1A4R254	5	10	1A1A4U27	5	36	1A1A4U57	5	44
1A1A4R255	5	10	1A1A4U28	5	37	1A1A4U58	5	44
1A1A4R256	5	10	1A1A4U29	5	38	1A1A4U59	5	44
1A1A4R257	5	10	1A1A4U30	5	39	1A1A4U60	5	50
1A1A4U1	5	15	1A1A4U31	5	25	1A1A4U61	5	23
1A1A4U2	5	16	1A1A4U32	5	40	1A1A4U62	5	23
1A1A4U3	5	17	1A1A4U33	5	41	1A1A4U63	5	51
1A1A4U4	5	18	1A1A4U34	5	42	1A1A4U64	5	23
1A1A4U5	5	19	1A1A4U35	5	23	1A1A4U65	5	44
1A1A4U6	5	20	1A1A4U36	5	25	1A1A4Y1	5	52
1A1A4U7	5	15	1A1A4U37	5	22	1A1A4Y2	5	53
1A1A4U8	5	21	1A1A4U38	5	25	1A1A6	2	
1A1A4U9	5	22	1A1A4U39	5	25	1A1AT1	2	
1A1A4U10	5	23	1A1A4U40	5	25	1A1CB1	2	
1A1A4U11	5	24	1A1A4U41	5	25	1A1CP1	2	
1A1A4U12	5	25	1A1A4U42	5	39	1A1DS1	2	
1A1A4U13	5	26	1A1A4U43	5	23	1A1DS2	2	
1A1A4U14	5	27	1A1A4U44	5	30	1A1DS3	2	
1A1A4U15	5	28	1A1A4U45	5	25	1A1E1	2	
1A1A4U16	5	15	1A1A4U46	5	43	1A1FL1	2	
1A1A4U17	5	29	1A1A4U47	5	44	1A1J1	2	
1A1A4U18	5	25	1A1A4U48	5	44	1A1PS1	2	
1A1A4U19	5	30	1A1A4U49	5	45	1A1R1	2	
1A1A4U20	5	31	1A1A4U50	5	45	1A1R2	2	
1A1A4U21	5	32	1A1A4U51	5	46	1A1R3	2	
1A1A4U22	5	25	1A1A4U52	5	47	1A1R4	2	
1A1A4U23	5	33	1A1A4U53	5	48	1A1W1	2	

CROSS-REFERENCE INDEXES

REFERENCE DESIGNATOR (REF DES) INDEX

REF. DES.	FIG.	ITEM	REF. DES.	FIG.	ITEM	REF. DES.	FIG.	ITEM
1A1W1J2	7		1A1W2J10	8		1A1W2XDS2	8	
1A1W1J3	7		1A1W2J11	8		1A1W2XDS3	8	
1A1W1J4	7		1A1W2J13	8		1A2	1	
1A1W1J7	7		1A1W2J14	8		1A3	1	
1A1W1P1	7		1A1W2P1	8		1A4	1	
1A1W2	2		1A1W2S1	8				
1A1W2J5	8		1A1W2XDS1	8				

APPENDIX D

COMPONENTS OF END ITEM (COI) AND BASIC ISSUE ITEMS (BII) LISTS

SECTION I. INTRODUCTION

D-1 SCOPE.

This appendix lists components of the end item and basic issue items for the RRSS to help you inventory the items for safe and efficient operation of the equipment.

D-2 GENERAL.

The Components of End Item and Basic Issue Items (BII) Lists are divided into the following sections:

a. Section II, Components of End Item. This listing is for information purposes only, and is not authority to requisition replacements. These items are part of the RRSS, but they are to be removed and separately packaged for transportation or shipment. As part of the end item, these items must be with the end item whenever it is issued or transferred between property accounts. Illustrations are furnished to help you find and identify the items.

b. Section III, Basic Issue Items. These essential items are required to place the RRSS in operation, operate it, and to do emergency repairs. Although shipped separately packaged, BII must be with the RRSS during operation and when it is transferred between property accounts. Listing these items is your authority to request them for replacement based on authorization of the end item by the TOE/MTOE. Illustrations are furnished to help you find and identify the items.

D-3 EXPLANATION OF COLUMNS.

a. Column (1), Illus Number, gives you the number of the item illustrated.

b. Column (2), National Stock Number, identifies the stock number of the item to be used for requisitioning purposes.

c. Column (3), Description and Usable On Code, identifies the Federal item name (in all capital letters) followed by a minimum description when needed. The last line below the description is the CAGED commercial and Government entity code) (in parentheses) and the part number.

d. Column (4), U/I (unit of issue), indicates how the item is issued for the National Stock Number shown in column two.

e. Column (5), Qty Rqd, indicates the quantity required.

SECTION II. COMPONENTS OF END ITEM

65113

(1) Illus Number	(2) National Stock Number	(3) Description CAGEC and Part Number	Usable On Code	(4) U/I	(5) Qty Rqd
1				EA	1
2				EA	2
3				EA	1

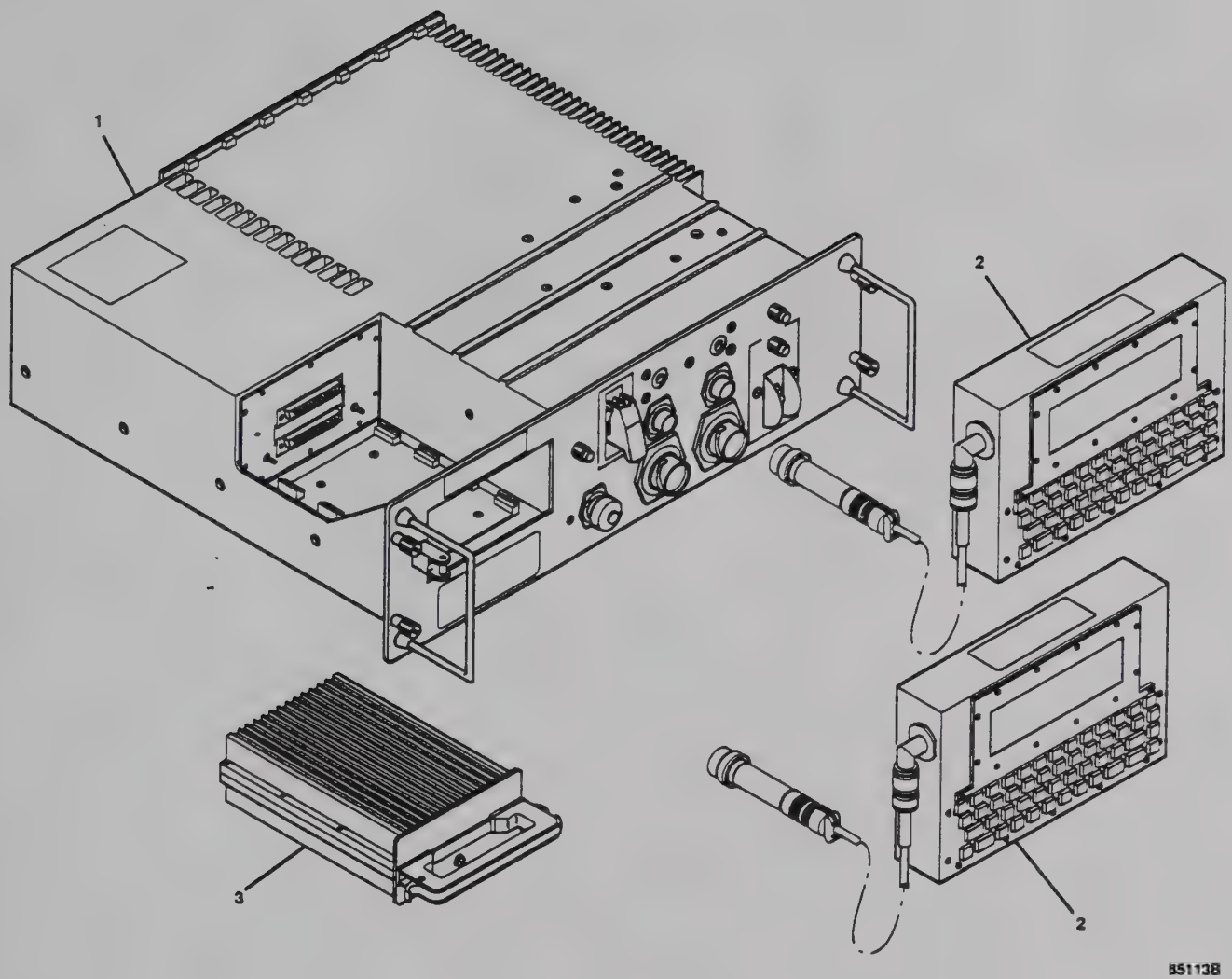
1
2
2
3
B5113B

SECTION III. BASIC ISSUE ITEMS

None Authorized

(1) Illus Number	(2) National Stock Number	(3) Description CAGEC and Part Number	Usable On Code	(4) U/I	(5) Qty Rqd

APPENDIX E

EXPENDABLE AND DURABLE ITEMS LIST

SECTION I. INTRODUCTION

E-1 SCOPE.

This appendix lists expendable and durable items you will need to operate and maintain the RRSS. This listing is for informational purposes only and is not authority to requisition the listed items. These items are authorized to you by CTA 50-970, Expendable/Durable Items (except Medical, Class V, Repair Parts, and Heraldic Items.)

E-2 EXPLANATION OF COLUMNS.

a. Column (1) - Item number. This number is assigned to the entry in the listing for referencing when required.

b. Column (2) - Level. This column identifies the lowest level of maintenance that requires the listed item.

C - Operator/Crew

O - Unit Maintenance

F - Direct Support Maintenance

H - General Support Maintenance

c. Column (3) - National Stock Number. This is the national stock number assigned to the item; use it to request or requisition the item.

d. Column (4) - Description. Indicates the federal item name and , if required, a description to identify the item. The last line for each item indicates the Commercial and Government Entity Code (CAGEC) parentheses followed by the part number.

e. Column (5) - Unit of Measure (U/M)/Unit of Issue (U/I). This measure is expressed by a two-character alphabetical abbreviation (e.g., EA, IN, PR). If the unit of measure differs from the unit of issue as shown in the Army Master Data File (AMDF) requisition the lowest unit of issue that will satisfy your requirements

SECTION II. EXPENDABLE AND DURABLE ITEMS LIST

(1) Item Number	(2) Level	(3) National Stock Number	(4) Description	(5) (U/M)/ (U/I)
1	F	8040-01-311-6475	Adhesive (04963) 2216B/A-GRAY	OZ
2	F		Adhesive, Sealant (81349) M4610611ATN	EA
3	F	5970-00-242-0505	Insulating Compound, Electrical (81349) MIL-I46058 TYPE UR	OZ

(1) Item Number	(2) Level	(3) National Stock Number	(4) Description	(5) (U/M)/ (U/I)
4	F		Primer, Adhesive (5U206) SP-120	OZ
5	F		Sealing Compound (81349) MIL-S-22473 GRADE C	OZ
6	F		Solder, Lead-Tin (81348) SN60WRMAP3	EA
7	F		Solder, Lead-Tin (81348) SN60WRMAP3-.031	EA
8	F		Solder, Lead Tin (81348) SN63WRMAP3	EA

APPENDIX F

ILLUSTRATED LIST OF MANUFACTURED ITEMS

F-1 INTRODUCTION.

a. This appendix includes complete instructions for making items authorized to be manufactured or fabricated at Direct Support maintenance level.

b. A part number index in alphanumeric order is provided for cross-referencing the part number of the item to be manufactured to the figure which covers fabrication criteria.

c. All bulk materials needed for manufacture of an item are listed by part number or specificaion number in a tabular list on the illustration.

F-2 MANUFACTURED ITEMS PART NUMBER INDEX.

Item	Part Number	Illustrations
Power Cable	Not Applicable	F-1 and F-2
Audio Test Calbe	Not Applicable	F-3 and F-3
Host Interface Cable	Not Applicable	F-4 and F-5

Material		
Item	**Description**	**Part Number**
1	Connector	MS3476W10-6S or equivalent
2	Backshell/Strain Relief	MS3417-10H 8806 or equivalent
3	Wire, 6 conductor, sufficient to handle unit power requirments, length as required for use	Not applicable

Notes:

6 conductor wire or indivial wires can be used as material available allows.
Terminate cable input leads as required for type of input source to be used.

TBD

Figure F-1. Power Cable, Mechanical Drawing

TBD

Figure F-2. Power Cable, Electrical Drawing

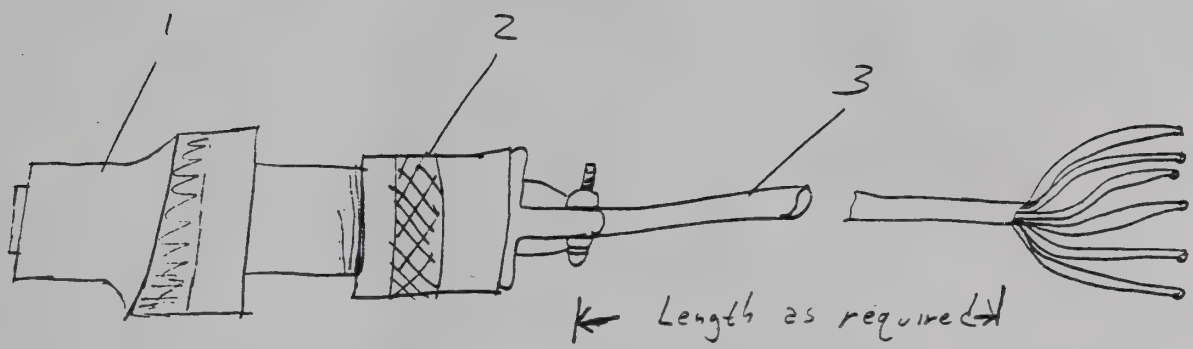
1
2
3
Length as required

F-1

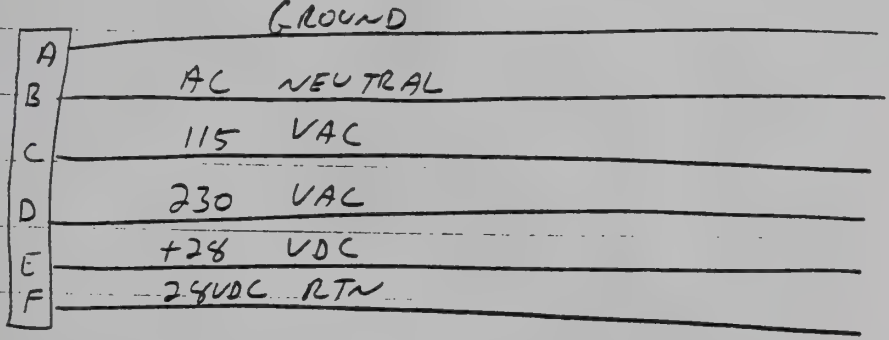
A
B
C
D
E
F
GROUND
AC NEUTRAL
115 VAC
230 VAC
+28 VDC
28VDC RTN

F-2

Material		
Item	**Description**	**Part Number**
1	Connector (mates to AUDIO IN/OUT,J4)	D38999/26WH55PN or equivalent
2	Backshell/Strain Releif (for connector 1)	M85049/38-23A or equivalent
3	Connector (mates to OPER 1 and OPER 2, J2 and J3)	M81511/56FBO or equivalent
4	Backshell/Strain Releif (for connector 3)	
5	Connector (mates to TAPE, J7)	
6	Backshell/Strain Releif (for connector 5)	
7	Wire, 24 AWG, 600VEHT TFE (MIL-W-22759/11), length as required for use	Not applicable

Notes:

Terminate cable input leads as required for type of input source to be used.

TBD

Figure F-3. Audio Test Cable, Mechanical Drawing

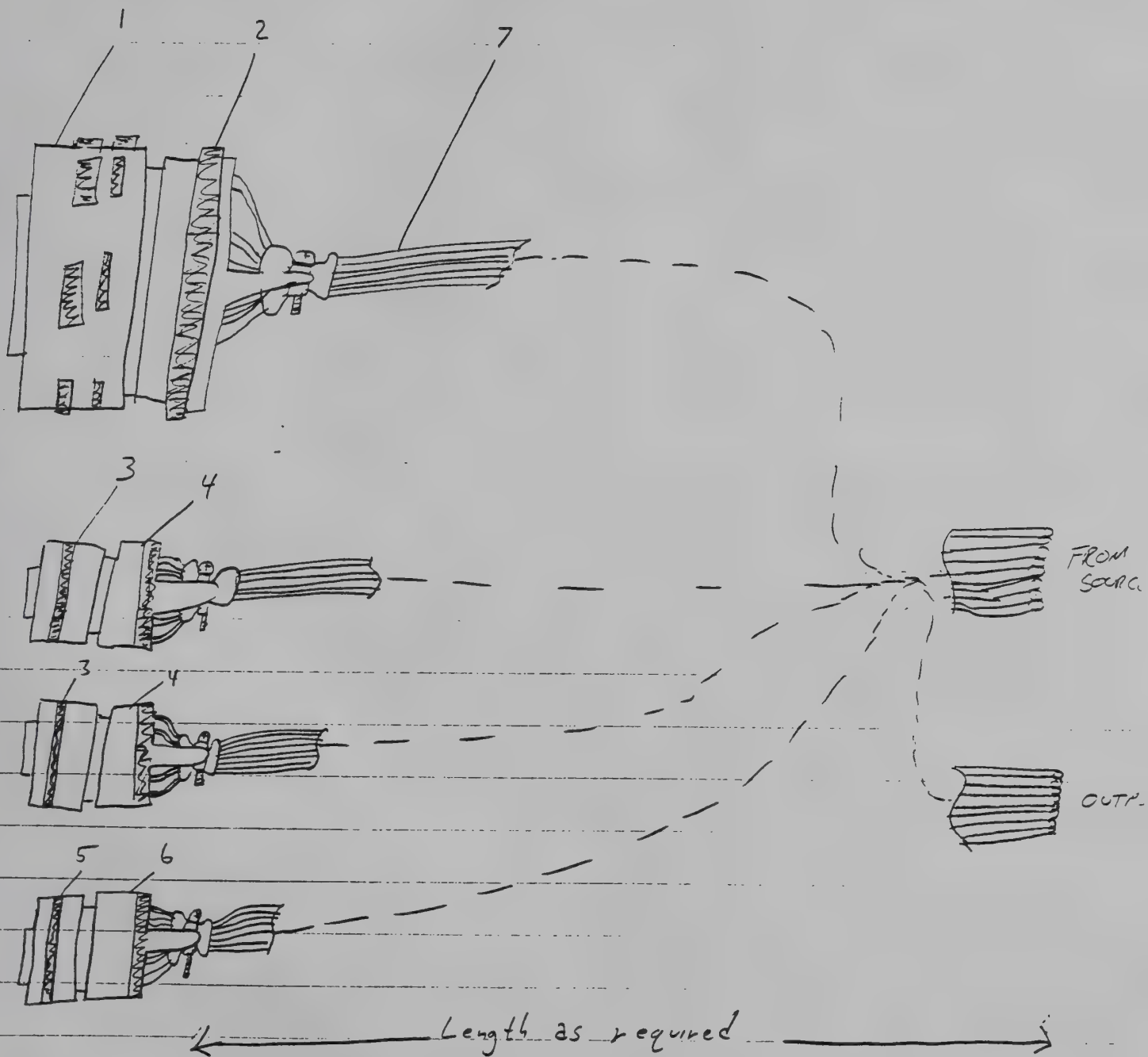

Audio test cable F-3

TBD

Figure F-4. Audio Test Cable, Electrical Drawing

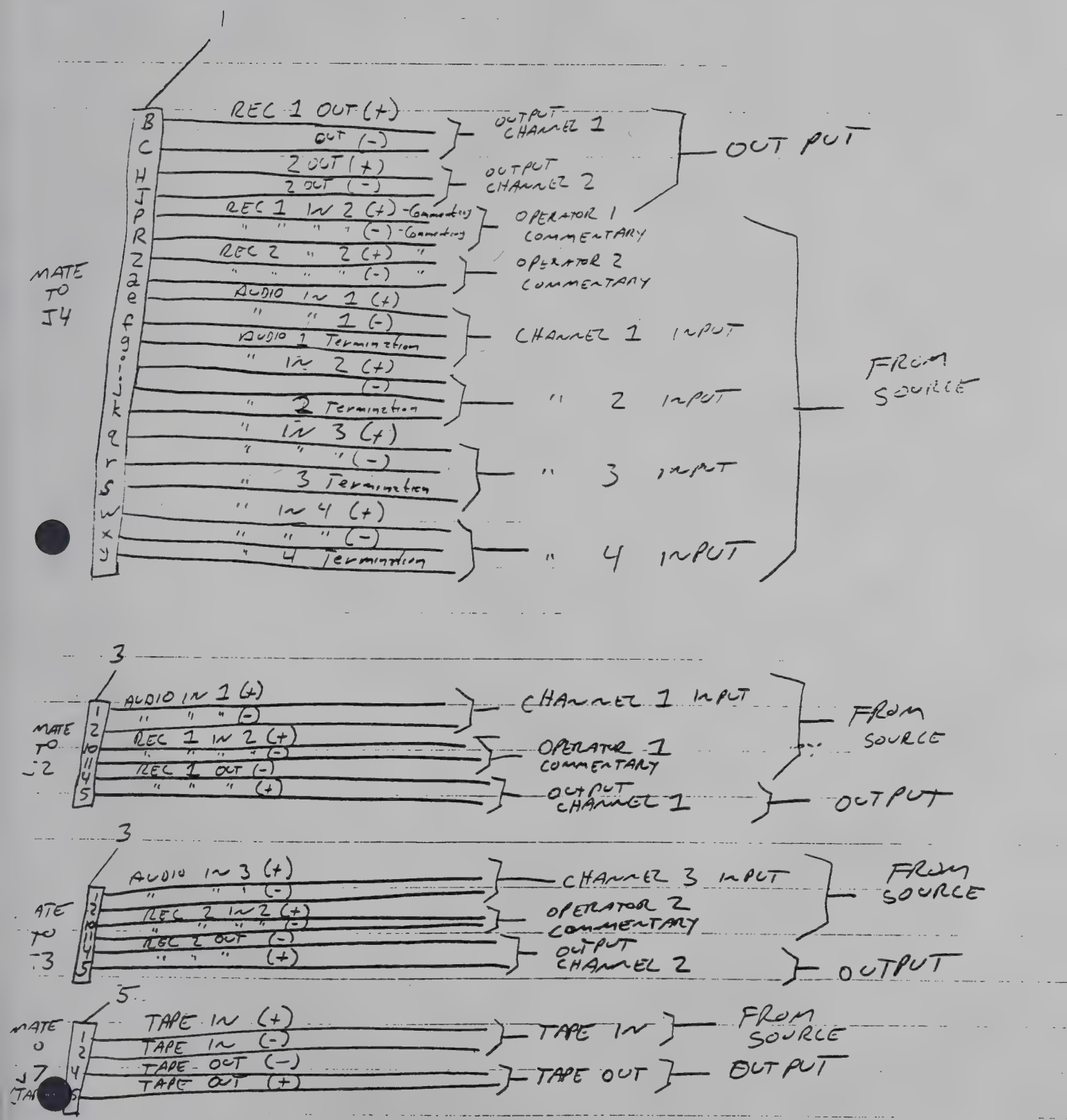
1
MATE TO J4
B
C
H
J
P
R
Z
a
e
f
g
j
k
q
r
s
w
x
y
REC 1 OUT (+)
OUT (-)
2 OUT (+)
2 OUT (-)
REC 1 IN 2 (+) -Commentary
" " " " (-) -Commentary
REC 2 " 2 (+) "
" " " " (-) "
AUDIO IN 1 (+)
" " 1 (-)
AUDIO 1 Termination
" IN 2 (+)
(-)
" 2 Termination
" IN 3 (+)
" " " (-)
" 3 Termination
" IN 4 (+)
" " " (-)
" 4 Termination
OUTPUT CHANNEL 1
OUTPUT CHANNEL 2
OPERATOR 1 COMMENTARY
OPERATOR 2 COMMENTARY
CHANNEL 1 INPUT
" 2 INPUT
" 3 INPUT
" 4 INPUT
OUT PUT
FROM SOURCE
3
MATE TO J2
1
2
10
11
4
5
AUDIO IN 1 (+)
" " " (-)
REC 1 IN 2 (+)
" " " " (-)
REC 1 OUT (-)
" " " (+)
CHANNEL 1 INPUT
OPERATOR 1 COMMENTARY
OUTPUT CHANNEL 1
FROM SOURCE
OUTPUT
3
ATE TO J3
AUDIO IN 3 (+)
" " " (-)
REC 2 IN 2 (+)
" " " " (-)
REC 2 OUT (-)
" " " (+)
CHANNEL 3 INPUT
OPERATOR 2 COMMENTARY
OUTPUT CHANNEL 2
FROM SOURCE
OUTPUT
5
MATE O J7
TAPE IN (+)
TAPE IN (-)
TAPE OUT (-)
TAPE OUT (+)
TAPE IN
TAPE OUT
FROM SOURCE
OUTPUT

Material		
Item	**Description**	**Part Number**
1	Connector (mates to HOST,J5)	D38999/26WH55PA or equivalent
2	Backshell/Strain Releif (for connector 1)	M85049/38-23A or equivalent
3	Connector (mates to AN/PSM-80 (V) 2, IEEE port)	Amphenol 57-33240-1 or equivalent
4	Connector (mates to AN/PSM-80 (V) 2, RS232 port))	M24308/1-1
5	Backshell/Strain Releif (for connector 5)	M85049/48-1-1
6	Male Screw Lock (2 each)	M24308/25-9
7	DIP Switch, 5 pole, single throw (5PST)	
8	Wire, 24 AWG, 600VEHT TFE (MIL-W-22759/11, length as required for use	Not applicable

TBD

Figure F-5. Host Cable, Mechanical Drawing

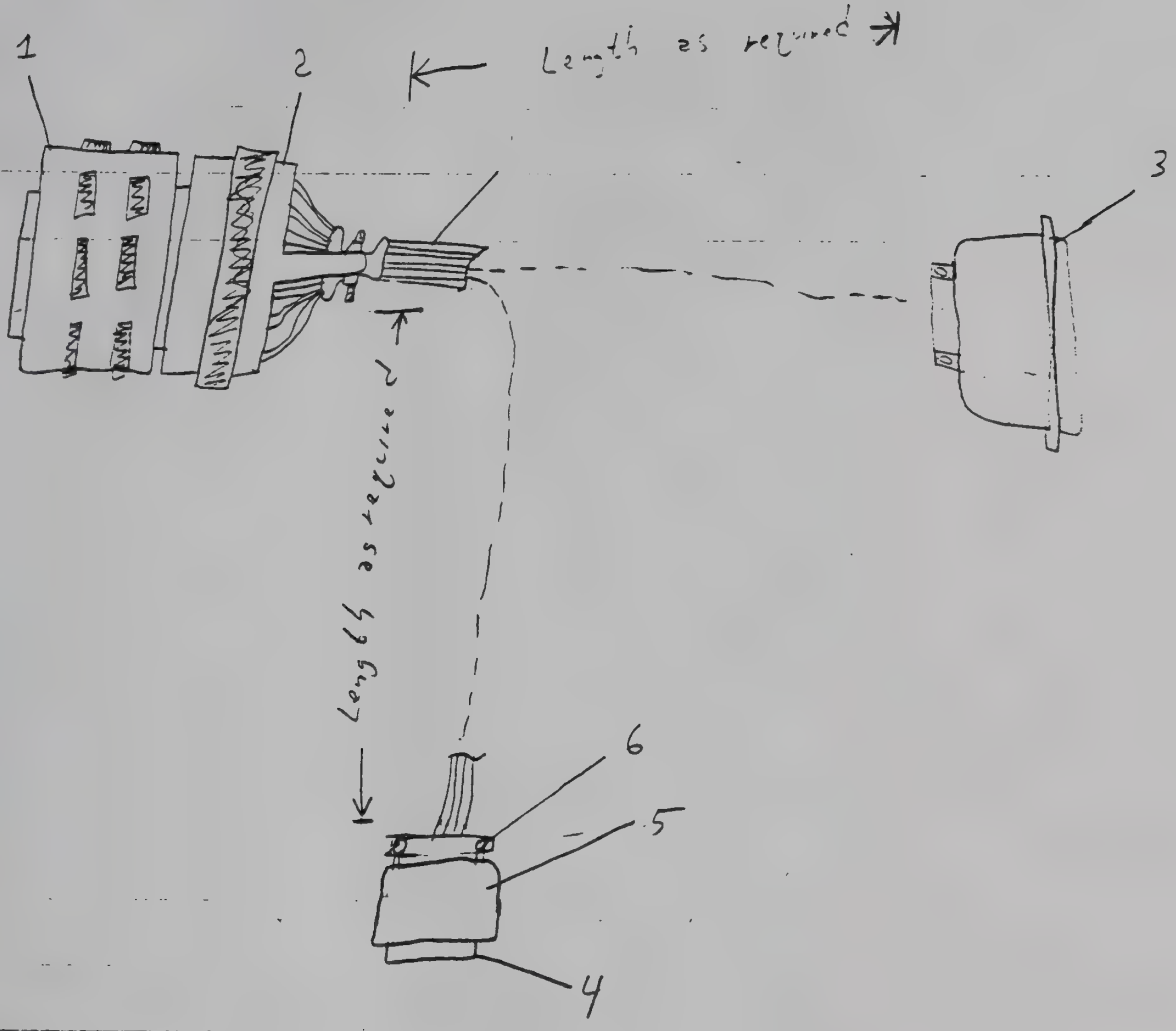

Fig F-5

TBD

Figure F-6. Host Cable, Electrical Drawing

GLOSSARY

TBD

TBD

FO 1. RRSS Fail Upon Power-Up.

TBD

FO 2. DISK FULL Indicator does not Illuminate.

TBD

FO 3. RRSS Fails to Respond.

TBD

FO 4. Failure of Operator Function.

TBD

FO 5. No Host Communication.

TBD

FO 6. No Audio in Headphone(s).

TBD

FO 7. POWER Indicator Fails to Illuminate.
(Sheet 1 of 2)

TBD

FO 7. POWER Indicator Fails to Illuminate.
(Sheet 2 of 2)

TBD

FO 8. BIT Failure. (Sheet 1 of 3)

TBD

FO 8. BIT Failure. (Sheet 2 of 3)

TBD

FO 8. BIT Failure. (Sheet 3 of 3)

TBD

FO 9. No Audio in Headphone(s).

TBD

FO 10. Recorder Fails to Respond.

TBD

FO 11. No Host Communication.

TBD

FO 12. Motherboard Wiring Diagram.

TBD

FO 13. Audio Wire Harness Wiring Diagram.

TBD

FO 14. CP Wire Harness Wiring Diagram.